ACACIA RESOURCES LTD

EXPLORATION LICENCE 8624 - BONROOK

FOURTH ANNUAL REPORT
FOR THE YEAR ENDED 19TH SEPTEMBER 1998

Author: N Martin

Drafting: A Horner

Report No: 08.9467

Date: October 1998

Copy No: 1

1:250000 PINE CREEK SD52-08
1:100000 PINE CREEK 5270

Distribution:

1. NT Department of Mines & Energy
2. Nullarbor Holdings Limited (Sydney)
3. Acacia Resources (Darwin)
4. Acacia Resources (URGM)
5. Acacia Resources (Melbourne)
6. Acacia Resources (Field)

SUMMARY

Exploration Licence (EL) 8624, in the Pine Creek area, NT, is currently being explored by Acacia Resources Limited under a joint venture agreement signed in December 1994 with the title holders Solomon Pacific Resources NL and Nullarbor Holdings Limited. By funding exploration Acacia had the right to earn a 70% interest in the tenement in it's own right.

Through the successful acquisition of Solomon Pacific Resources in June 1996, Acacia also assumed the interests of Solomon Pacific Resources in EL 8624 and has now earned a 79.9% interest in the tenement. The centre of the tenement is located approximately 18km south east of Acacia's Union Reefs Gold Mine and treatment facilities.

Work completed for the year ending 19th September 1998 by Acacia Resources included:-

- Infill gridding in the southeat corner of the licence. Approximately 250m of gridding was completed
- Infill soil sampling over the newly gridded area, for eleven (11) samples.
- Construction & sampling of five (5) costeans, totalling 704m.
- Completion of costean logging and mapping.
- Drilling of twelve (12) reverse circulation drill holes, for a total of 1170m.

CONTENTS

1.0 INTRODUCTION

2.0 TENEMENT ISSUES

2.1 Aboriginal Area Protection Authority Clearance

3.0 LOCATION AND ACCESS

4.0 REGIONAL SETTING

5.0 TENEMENT GEOLOGY AND MINERALISATION

6.0 WORK COMPLETED

6.1 Gridding & Surveying

6.2 Soil Sampling

6.3 Costean Sampling

6.4 RC Drilling

6.5 Geophysics

6.6 Results

7.0 ENVIRONMENTAL

8.0 PROPOSED WORK - year ending 19th September 1999

9.0 EXPENDITURE STATEMENTS

9.1 Expenditure - Year ending 19th September 1998

9.2 Proposed Expenditure - Year ending 19th September 1999

10.0 REFERENCES

APPENDIX LISTING

Appendix 1 Soil Sample Ledgers & Assay Results

Appendix 2 Costean Ledgers & Assay Results

Appendix 3 Drill Ledgers & Results

Appendix 4 Environmental Register

FIGURE LISTING

Figure	Description	Scale
1.	Bonrook EL 8624 Tenement Location	1:200,000
2.	Pine Creek Project, Regional Geology	1:200,000
3.	Bonrook EL 8624, Drilling & Costean Locations	1:10,000
4.	Bonrook EL 8624, Soil Sampling Locations and Gold results	1:10,000
5.	Bonrook EL 8624, Drill Section 14500N	1:500
6.	Bonrook EL 8624, Drill Section 14400N	1:500
7.	Bonrook EL 8624, Drill Section 14200N	1:500
8.	Bonrook EL 8624, Drill Section 14000N	1:500
9.	Bonrook EL 8624 Costean Mapping & Sample Location	1:100
10.	Aeromagnetic Survey Flight Lines (1996/97)	1:10,000
11.	Aeromagnetic Survey Contours (1996/97)	1;10,000

1.0 INTRODUCTION

Exploration Licence (EL) 8624, in the Pine Creek area, NT, is currently being explored by Acacia Resources Limited, under a joint venture agreement with Nullarbor Holdings Limited. The centre of the tenement is located approximately 6 km southeast of the Pine Creek township and 18km southeast of the newly established Union Reefs Gold Mine and treatment facilities. Acacia Resources is exploring the Bonrook tenement with the aim of finding a resource that could provide additional mill feed for its current operations at Union Reefs. This report details all work carried out in EL 8624 for the year ending 19th September, 1998, the fourth year of licence tenure.

2.0 TENEMENT ISSUES

EL 8624, comprising 2 graticular blocks, was granted to Solomon Pacific Resources NL on the 20th September 1994 for a period of 3 years. Under a letter agreement signed between Acacia Resources Limited, Solomon Pacific Resources and Nullabor Holdings Limited on the 23rd November 1994, Acacia assumed management of the tenement.

Through Acacia's takeover of Solomon Pacific Resources on 24th June 1996, Acacia assumed Solomon Pacific's interest in EL 8624. Currently interests in the tenement stand at Acacia Resources 79.99%, Nullarbor Holdings 20.1%.

A covenant of $45,000 was set by the NTDME for the third year of exploration tenure, and $40,000 expenditure was proposed in the last annual report for the fourth year of tenure.

An application for waiver of reduction was lodged for EL 8624 on the 15th August 1996, and was subsequently granted.

An application for renewal of EL 8624 was submitted to the NTDME on 23rd June, 1997, and a decision is still pending.

2.1 Aboriginal Area Protection Authority Clearance

The AAPA issued Authority Certificate No. C96/063, for a period of two years on the 6th May 1997.There are no registered sites of significance within the tenement.

3.0 LOCATION AND ACCESS

The centre of EL 8624 is located approximately 6km south-east of the township of Pine Creek in the Northern Territory, (Figure 1). The licence area can be accessed via the Stuart Highway from Darwin to Pine Creek, then via the old "Wandie Track", accessed from the Airstrip turn off on the Stuart Highway on the outskirts of Pine

Creek. Following the Wandie Track from Pine Creek approximately 4km, the lease is accessed by turning south along the Darwin to Amadeus Basin Gas Pipeline.

The licence area falls entirely within Bonrook Station and keys for locked gates along the Wandie Track must be sought from the station manager's residence. Alternate access to the tenement can be gained from tracks leading north from the Bonrook Station Homestead. The Homestead is well sign posted on the Stuart Highway south of Pine Creek.

4.0 REGIONAL SETTING

EL 8624 is located in the Pine Creek area in the central Pine Creek Geosyncline (Figure 2). The geosyncline contains Early Proterozoic metasedimentary rocks resting on a gneissic and granitic Archaean basement. The metasediments represent a preserved basinal sequence up to 14km thick (Needham et al., 1980), which was tightly folded and metamorphosed to greenschist facies (in places to amphibolite facies) at about 1890 to 1870 Ma (Ferguson, 1980).

The geosynclinal sequence is intruded by transitional igneous rocks including pre-deformational dolerite lopoliths and dykes and post deformational granites. Largely undeformed platform cover of Middle and Late Proterozoic, Cambro-Ordovician and Mesozoic strata rest on these with marked unconformity.

EL 8624 lies in the southern part of a neck of metasediments, assigned to the Burrell Creek and Mt Bonnie Formations (Stuart-Smith, 1987), which separates two lobes of the Cullen Batholith. This metasedimentary neck contains both the Union Reefs (Au) and Pine Creek (Au) ore bodies as well as numerous areas of historic workings.

5.0 TENEMENT GEOLOGY AND MINERALISATION

EL 8624 is extensively covered by soil with Burrell Creek (Pfb) and Mt Bonnie (Pso) Formations intruded by granitic rocks of the Bonrook Granite (Pgcb), Allamber Springs Granite (Pgca) and undifferentiated granitoids (Pgc) (Figure 2). Swarms of quartz and quartz breccia veins are present along the northern and western margins of the granites. Minor hornfelsing is apparent around the veins. In the south-eastern portion of the licence area, Quaternary alluvium (Qa) and deep humic soils (Qf) occur in low ground and along drainage channels. A distinct conglomerate horizon exists within the Burrell Creek Formation in the east near the margin of the Allamber Springs Granite.

Gold mineralisation within the licence appears to be associated with narrow, steeply dipping shear zones which trend through both sediments and granite in a north westerly direction. The mineralisation is characterised by quartz veining and minor sulphides, with silicic and potassic alteration of the host rock. There are no known gold workings in the tenement.

6.0 WORK COMPLETED

During the reporting period the following exploration work was completed;

6.1 Gridding & Surveying

A small gridding programme was completed prior to the sampling undertaken during the reporting period. 250m of gridding was completed with galvanised droppers at 25m centres along lines 200m apart.

Microsurvey of Pine Creek were used to accurately survey in collar coordinates for all RC drilling completed to date. A difference of approximately 50m has been noted between the "nominal" collar coordinates derived from grid pegs on site, and the surveyed coordinates derived from an accurate survey traverse from the regional baseline located several kilometres to the west. Nominal coordinates for the collars have been used in this report so that the drilling has the correct spatial relationship to soil sampling and costeaning work. Both sets of coordinate data have been provided in the appendices.

6.2 Soil Sampling and Results

During the reporting period 11 soil samples were collected as part of an infill programme in an area of previously defined gold anomalism. Samples of approximately 2kg weight were collected from the B_2 - C soil horizon by either hoe pick or mechanical auger, and sieved to -5mm. Samples were taken at 25m centres along 200m spaced grid lines.

The samples were dispatched to Assaycorp Ltd. in Pine Creek, where they were crushed, split to approximately 1kg, and then pulverised to 90% passing 100μm. Samples were then analysed for Au to 1ppb detection limit (FALL), and Cu, Pb, Zn and As to ppm level by AAS (MA-3). (Refer Appendix 1 & Figure 4)

6.4 Costean Sampling

5 costeans (CTN98PT08-12) were completed during the reporting period for a total of 704 metres (only part of CTN98PT08 is on EL8624). The costeans were aimed at testing areas of anomalous gold in soil values, and to aid in the targeting of drillholes (Figure 3).

Costean construction was undertaken by Ian Genat of Union Extended Mine, Pine Creek, using a Hitachi excavator. The costeans were dug to a depth of approximately 1.5m, and continuously channel sampled along the base of the northern wall to produce 2 metre composite samples of approximately 3kg weight. Nine (9) selective rock chip samples were also taken and are detailed in figure 9 and appendix 2.

Samples were dispatched to Assaycorp in Pine Creek where they were crushed and pulverised to 90% passing 90μm, and then analysed for Au to 0.01ppm (FA50).(Refer Appendix 2)

All costeans were mapped at 1:100 scale with attention paid to any apparent structures and bedding. Maps showing costean geology & sample locations are supplied in figure 9.

6.5 Drilling

During the reporting period 12 reverse circulation (RC) holes were completed for 1170 metres of drilling (RC97PT07-16, & RC97PT18-19). The holes were aimed at testing targets defined by soil anomalism, costeaning and geological mapping (Figure 3).

The drilling was undertaken by Gaden Drilling Pty Ltd based in Batchelor. Holes were completed using a $5^1/_2$" face return hammer, with holes collared using a larger $7^1/_2$" hammer to a depth of 4m. All reverse circulation holes have been sampled at 1 metre intervals using a cyclone and an attached riffle splitter, from which a 2-4 kg sample was obtained. The remaining sample was bagged and retained on site.

Samples were dispatched to Assaycorp in Pine Creek, where they were crushed and pulverised to 90% passing 90μm and analysed for gold by fire assay to 0.01ppm (FA50). Assay results were checked against a series of standards that were placed in the drill sample batches. (Refer Appendix 3 & Figures 5-8)

6.6 Geophysics

Regional aeromagnetic, gravity and radiometric datasets were merged and reprocessed with the aim of generating a regional geological interpretation. This work is ongoing.

Flight line and contours for last years aeromagnetic survey by UTS are included in this report.

6.7 Results

The infill soil sampling programme confirmed the tenor of gold in soil anomalism defined in earlier work.

The costeaning and RC drilling defined several zones of low grade gold mineralisation, with the significant intersections tabulated below.

Costean	From (m)	To (m)	Au Intercept
CTN98PT08	26	28	2m @ 0.34g/t
CTN98PT08	38	40	2m @ 0.34g/t
CTN98PT10	44	46	2m @ 0.27g/t
CTN98PT11	102	104	2m @ 0.31g/t
CTN98PT11	140	146	6m @ 0.47g/t

RC Hole	From (m)	To (m)	Au Intercept
RC97PT08	54	55	1m @ 0.44g/t
RC97PT10	59	62	3m @ 0.67g/t
RC97PT11	88	92	4m @ 0.55g/t
RC97PT14	85	88	3m @ 0.49g/t
RC97PT16	22	28	6m @ 0.58g/t
RC97PT18	35	47	12m @ 0.32g/t
RC97PT19	21	22	1m @ 0.61g/t
	70	71	1m @ 1.63g/t
	76	77	1m @ 0.52g/t

7.0 ENVIRONMENTAL

All exploration was conducted in a fashion that caused minimal environmental disturbance, as per guidelines set down by NTDME.

An environmental register has been compiled for the disturbance, pre-existing and current within the licence area. This register is supplied as Appendix 4.

8.0 WORK PROPOSAL - year ending 19 September 1999

The work proposed for the year ending 19th September 1999 includes RC drilling of targets defined by geological, geochemical and geophysical interpretations. The main target area is likely to be at the Nagshead prospect, where higher grade intercepts were encountered during 1996 RC drilling.

9.0 EXPENDITURE STATEMENT

9.1 Expenditure - Year ending 19th September 1998

Regional Office - Staffing	$10,186
Regional Office - Support	$20,788
Geochemical Surveys	$5,466
Geophysical Surveys	$169
Geology	$1,790
Analyses	$16,316
Drilling	$36,180
Aerial Surveys	$12
Gridding/Surveying/Access	$4,472
Other	$18
Admin (15%)	$14,310
TOTAL EXPENDITURE	$109,707

9.2 Proposed expenditure - Year ending 19 September 1999

Staffing/Support	$9,000
Analyses	$7,000
Drilling	$20,000
Gridding/Surveying/Access	$1,000
Rehabilitation	$3,000
TOTAL EXPENDITURE	$40,000

10.0 REFERENCES

DANN, R.N., 1984, Annual Report - EL4398 by Gold Fields Exploration Pty Ltd. Unpublished report for NTDME CR84/255.

FERGUSON J, 1980. Metamorphism in the Pine Creek Geosyncline and its bearing on stratigraphic correlations. In FERGUSON J, & GOLBY AB, (Editors) - URANIUM IN THE PINE CREEK GEOSYNCLINE. International Atomic Energy Agency, Vienna, 91-100.

NEEDHAM RS, CRICK IH, & STUART-SMITH PG, 1980. Regional geology of the Pine Creek Geosyncline. In FERGUSON J, & GOLBY AB, (Editors) - URANIUM IN THE PINE CREEK GEOSYNCLINE. International Atomic Energy Agency, Vienna, 1-22.

STUART-SMITH PG, NEEDHAM RS, BAGAS L & WALLACE DH, 1987. Pine Creek, Northern Territory, 1:100,000 map and commentary. Bureau of Mineral Resources, Canberra.

SPURWAY C.C., 1995. Exploration Licence 8624 - Bonrook, First Annual Report for the Year Ended 19th September 1995. Unpublished report to the NTDME. (Acacia Report No. 08.7536)

SPURWAY C.C., 1996. Exploration Licence 8624 - Bonrook, Second Annual Report for the Year Ended 19th September 1996. Unpublished report to the NTDME. (Acacia Report No. 08.8415)

VELA N.; 1997; Exploration Licence 8624 - Bonrook, Third Annual Report for the year ending 19th September 1997. Unpublished report to the NTDME. (Acacia Report No. 08.8947).

WITHAM, W.J.A., 1990. Exploration Licence Number 6255, Bonrook, Annual report for the year ending 16th November 1990.

APPENDIX 1

Soil Sample Ledgers
&
Assay Results

Surface Sample Ledger

Sample	AMG North	AMG East	Samp Type	Mesh Size	From	To	Cover Colour	Cover Type	Samp Colour	Major Rock	Minor Rock	Coarse Fraction	Terrain	Comments
1203204	8467234.762	813487.938	AUGER	-5.M	1.3	1.8	LTBN	SL	GY	QV	SH	10	R	
1203204P	8467234.762	813487.938	AUGER	-5.M	1.3	1.8	LTBN	SL	GY	QV	SH	10	R	
1203205	8467221.514	813466.737	AUGER	-5.M	2	2.5	LTBN	SL	GY	QV	SH	10	R	
1203205P	8467221.514	813466.737	AUGER	-5.M	2	2.5	LTBN	SL	GY	QV	SH	10	R	
1203206	8467208.266	813445.536	AUGER	-5.M	0.5	1	LTBN	SL	GY	QV	SH	10	R	
1203207	8467195.018	813424.335	AUGER	-5.M	1	1.5	LTBN	SL	GY	QV	SH	10	R	
1203208	8467181.770	813403.134	AUGER	-5.M	1.5	2.5	LTBN	SL	PK	QV	SH	10	S	
1203209	8467168.522	813381.932	AUGER	-5.M	0.9	1.4	LTBN	SL	TN	QV	SH	10	S	
1203210	8467155.274	813360.731	AUGER	-5.M	1	1.5	LTBN	SL	TN	QV	SH	10	S	
1203211	8467142.026	813339.530	AUGER	-5.M	2.4	2.9	LTBN	SL	TN	QV	SH	10	S	
1203226	8466998.912	813487.916	AUGER	-5.M	1	1.5	GY	SL	KK	GW		10	S	
1203227	8466985.664	813466.715	AUGER	-5.M	1.5	2	GY	SL	OGCM	QV	GW	10	S	
1203228	8466972.416	813445.514	AUGER	-5.M	1.5	2	GY	SL	BN	QV	GW	10	S	

Surface Assay Report

Sample Type	Samp	Au ppm	Au ppb	As	Ag	Bi	Cu	Ni	Pb	Pd	Pt	Zn	Batch
AUGER	1203204	0.060	60.0	2700			48		17			112	AC 41126
AUGER	1203205	0.026	26.0	1360			39		27			98	AC 41126
AUGER	1203206	0.001	1.0	85			11		40			41	AC 41126
AUGER	1203207	0.003	3.0	265			9		12			63	AC 41126
AUGER	1203208	0.004	4.0	218			43		103			139	AC 41126
AUGER	1203209	0.001	1.0	22			5		12			14	AC 41126
AUGER	1203210	0.001	1.0	22			5		9			16	AC 41126
AUGER	1203211	0.001	1.0	18			5		22			22	AC 41126
AUGER	1203226	0.002	2.0	173			12		22			60	AC 41126
AUGER	1203227	0.001	1.0	54			7		38			24	AC 41126
AUGER	1203228	0.002	2.0	35			8		26			21	AC 41126

APPENDIX 2

Costean Ledgers
&
Assay Results

Collar Report

Hole	Depth	Grid_n	Grid_e	AMG_n	AMG_e	RL	Date	Comments
CTN98PT08	198	13995.000	9652.000	8467303.138	813418.091		5/27/1998	
CTN98PT09	186	14695.000	9508.000	8467820.464	812925.029		5/27/1998	
CTN98PT10	154	14895.000	9486.000	8467978.415	812800.388		5/27/1998	
CTN98PT11	200	15195.000	9390.000	8468181.958	812559.999		5/27/1998	
CTN98PT12	104	15395.000	9448.000	8468382.303	812503.202		5/27/1998	

Downhole Survey Report

Hole	Depth	Grid	Dip	Grid Azim	Mag Azim	Date	Comments
CTN98PT08	0	DPCBNROOK	0	90	54	5/27/1998	
CTN98PT08	198	DPCBNROOK	0	90	54	5/27/1998	
CTN98PT09	0	DPCBNROOK	0	90	54	5/27/1998	
CTN98PT09	186	DPCBNROOK	0	90	54	5/27/1998	
CTN98PT10	0	DPCBNROOK	0	90	54	5/27/1998	
CTN98PT10	154	DPCBNROOK	0	90	54	5/27/1998	
CTN98PT11	0	DPCBNROOK	0	90	54	5/27/1998	
CTN98PT11	200	DPCBNROOK	0	90	54	5/27/1998	
CTN98PT12	0	DPCBNROOK	0	90	54	5/27/1998	
CTN98PT12	104	DPCBNROOK	0	90	54	5/27/1998	

DrillHole Assay Report

Hole	Samp	Fm	To	Au_ppm	Au_ppb	As	Bi	Batch
CTN98PT08	1269001	0	2	0.190	190			AC 41687
CTN98PT08	1269002	2	4	0.070	70			AC 41687
CTN98PT08	1269003	4	6	0.080	80			AC 41687
CTN98PT08	1269004	6	8	0.090	90			AC 41687
CTN98PT08	1269005	8	10	0.020	20			AC 41687
CTN98PT08	1269006	10	12	0.020	20			AC 41687
CTN98PT08	1269007	12	14	0.025	25			AC 41687
CTN98PT08	1269008	14	16	0.040	40			AC 41687
CTN98PT08	1269009	16	18	0.020	20			AC 41687
CTN98PT08	1269010	18	20	0.030	30			AC 41687
CTN98PT08	1269011	20	22	0.100	100			AC 41687
CTN98PT08	1269012	22	24	0.010	10			AC 41687
CTN98PT08	1269013	24	26	0.040	40			AC 41687
CTN98PT08	1269014	26	28	0.285	285			AC 41687
CTN98PT08	1269015	28	30	0.030	30			AC 41687
CTN98PT08	1269016	30	32	0.060	60			AC 41687
CTN98PT08	1269017	32	34	0.015	15			AC 41687
CTN98PT08	1269018	34	36	0.060	60			AC 41687
CTN98PT08	1269019	36	38	0.020	20			AC 41687
CTN98PT08	1269020	38	40	0.315	315			AC 41687
CTN98PT08	1269021	40	42	0.030	30			AC 41687
CTN98PT08	1269022	42	44	0.020	20			AC 41687
CTN98PT08	1269023	44	46	0.030	30			AC 41687
CTN98PT08	1269024	46	48	0.090	90			AC 41687
CTN98PT08	1269025	48	50	0.130	130			AC 41687
CTN98PT08	1269026	50	52	0.120	120			AC 41687
CTN98PT08	1269027	52	54	0.060	60			AC 41687
CTN98PT08	1269028	54	56	0.070	70			AC 41687
CTN98PT08	1269029	56	58	0.030	30			AC 41687
CTN98PT08	1269030	58	60	0.020	20			AC 41687

Hole	Samp	Fm	To	Au_ppm	Au_ppb	As	Bi	Batch
CTN98PT08	1269032	60	62	0.020	20			AC 41687
CTN98PT08	1269033	62	64	0.040	40			AC 41687
CTN98PT08	1269034	64	66	0.030	30			AC 41687
CTN98PT08	1269035	66	68	0.010	10			AC 41687
CTN98PT08	1269036	68	70	0.145	145			AC 41687
CTN98PT08	1269037	70	72	0.130	130			AC 41687
CTN98PT08	1269038	72	74	0.190	190			AC 41687
CTN98PT08	1269039	74	76	0.070	70			AC 41687
CTN98PT08	1269040	76	78	0.050	50			AC 41687
CTN98PT08	1269041	78	80	0.020	20			AC 41687
CTN98PT08	1269042	80	82	0.060	60			AC 41687
CTN98PT08	1269043	82	84	0.010	10			AC 41687
CTN98PT08	1269044	84	86	0.005	5			AC 41687
CTN98PT08	1269045	86	88	0.005	5			AC 41687
CTN98PT08	1269046	88	90	0.035	35			AC 41687
CTN98PT08	1269047	90	92	0.005	5			AC 41687
CTN98PT08	1269048	92	94	0.005	5			AC 41687
CTN98PT08	1269049	94	96	0.005	5			AC 41687
CTN98PT08	1269050	96	98	0.005	5			AC 41687
CTN98PT08	1269051	98	100	0.005	5			AC 41687
CTN98PT08	1269052	100	102	0.005	5			AC 41687
CTN98PT08	1269053	102	104	0.005	5			AC 41687
CTN98PT08	1269054	104	106	0.005	5			AC 41687
CTN98PT08	1269055	106	108	0.010	10			AC 41687
CTN98PT08	1269056	108	110	0.020	20			AC 41687
CTN98PT08	1269057	110	112	0.005	5			AC 41687
CTN98PT08	1269058	112	114	0.010	10			AC 41687
CTN98PT08	1269059	114	116	0.005	5			AC 41687
CTN98PT08	1269060	116	118	0.010	10			AC 41687
CTN98PT08	1269062	118	120	0.005	5			AC 41687
CTN98PT08	1269063	120	122	0.005	5			AC 41687
CTN98PT08	1269064	122	124	0.005	5			AC 41687

Hole	Samp	Fm	To	Au_ppm	Au_ppb	As	Bi	Batch
CTN98PT08	1269065	124	126	0.005	5			AC 41687
CTN98PT08	1269066	126	128	0.005	5			AC 41687
CTN98PT08	1269067	128	130	0.005	5			AC 41687
CTN98PT08	1269068	130	132	0.005	5			AC 41687
CTN98PT08	1269069	132	134	0.005	5			AC 41687
CTN98PT08	1269070	134	136	0.005	5			AC 41687
CTN98PT08	1269071	136	138	0.005	5			AC 41687
CTN98PT08	1269072	138	140	0.005	5			AC 41687
CTN98PT08	1269073	140	142	0.005	5			AC 41687
CTN98PT08	1269074	142	144	0.005	5			AC 41687
CTN98PT08	1269075	144	146	0.005	5			AC 41687
CTN98PT08	1269076	146	148	0.005	5			AC 41687
CTN98PT08	1269077	148	150	0.005	5			AC 41687
CTN98PT08	1269078	150	152	0.005	5			AC 41687
CTN98PT08	1269079	152	154	0.005	5			AC 41687
CTN98PT08	1269080	154	156	0.005	5			AC 41687
CTN98PT08	1269081	156	158	0.005	5			AC 41687
CTN98PT08	1269082	158	160	0.005	5			AC 41687
CTN98PT08	1269083	160	162	0.005	5			AC 41687
CTN98PT08	1269084	162	164	0.005	5			AC 41687
CTN98PT08	1269085	164	166	0.005	5			AC 41687
CTN98PT08	1269086	166	168	0.005	5			AC 41687
CTN98PT08	1269087	168	170	0.005	5			AC 41687
CTN98PT08	1269088	170	172	0.005	5			AC 41687
CTN98PT08	1269089	172	174	0.010	10			AC 41687
CTN98PT08	1269090	174	176	0.020	20			AC 41687
CTN98PT08	1269092	176	178	0.020	20			AC 41687
CTN98PT08	1269093	178	180	0.010	10			AC 41687
CTN98PT08	1269094	180	182	0.010	10			AC 41687
CTN98PT08	1269095	182	184	0.010	10			AC 41687
CTN98PT08	1269096	184	186	0.010	10			AC 41687
CTN98PT08	1269097	186	188	0.010	10			AC 41687

Hole	Samp	Fm	To	Au_ppm	Au_ppb	As	Bi	Batch
CTN98PT08	1269098	188	190	0.010	10			AC 41687
CTN98PT08	1269099	190	192	0.010	10			AC 41687
CTN98PT08	1269100	192	194	0.010	10			AC 41687
CTN98PT08	1269101	194	196	0.010	10			AC 41687
CTN98PT08	1269102	196	198	0.010	10			AC 41687
CTN98PT09	1155738	0	2	0.005	5			AC 41665
CTN98PT09	1155739	2	4	0.005	5			AC 41665
CTN98PT09	1155740	4	6	0.005	5			AC 41665
CTN98PT09	1155741	6	8	0.005	5			AC 41665
CTN98PT09	1155742	8	10	0.005	5			AC 41665
CTN98PT09	1155743	10	12	0.020	20			AC 41665
CTN98PT09	1155744	12	14	0.025	25			AC 41665
CTN98PT09	1155745	14	16	0.060	60			AC 41665
CTN98PT09	1155746	16	18	0.005	5			AC 41665
CTN98PT09	1155747	18	20	0.005	5			AC 41665
CTN98PT09	1155748	20	22	0.010	10			AC 41665
CTN98PT09	1155749	22	24	0.005	5			AC 41665
CTN98PT09	1155750	24	26	0.005	5			AC 41665
CTN98PT09	1155751	26	28	0.020	20			AC 41665
CTN98PT09	1155752	28	30	0.010	10			AC 41665
CTN98PT09	1155753	30	32	0.005	5			AC 41665
CTN98PT09	1155754	32	34	0.005	5			AC 41665
CTN98PT09	1155755	34	36	0.005	5			AC 41665
CTN98PT09	1155756	36	38	0.020	20			AC 41665
CTN98PT09	1155757	38	40	0.045	45			AC 41665
CTN98PT09	1155758	40	42	0.005	5			AC 41665
CTN98PT09	1155759	42	44	0.005	5			AC 41665
CTN98PT09	1155760	44	46	0.005	5			AC 41665
CTN98PT09	1155762	46	48	0.005	5			AC 41665
CTN98PT09	1155763	48	50	0.010	10			AC 41665
CTN98PT09	1155764	50	52	0.005	5			AC 41665
CTN98PT09	1155765	52	54	0.005	5			AC 41665

Hole	Samp	Fm	To	Au_ppm	Au_ppb	As	Bi	Batch
CTN98PT09	1155766	54	56	0.005	5			AC 41665
CTN98PT09	1155767	56	58	0.005	5			AC 41665
CTN98PT09	1155768	58	60	0.005	5			AC 41665
CTN98PT09	1155769	60	62	0.010	10			AC 41665
CTN98PT09	1155770	62	64	0.005	5			AC 41665
CTN98PT09	1155771	64	66	0.005	5			AC 41665
CTN98PT09	1155772	66	68	0.005	5			AC 41665
CTN98PT09	1155773	68	70	0.005	5			AC 41665
CTN98PT09	1155774	70	72	0.010	10			AC 41665
CTN98PT09	1155775	72	74	0.005	5			AC 41665
CTN98PT09	1155776	74	76	0.005	5			AC 41665
CTN98PT09	1155777	76	78	0.005	5			AC 41665
CTN98PT09	1155778	78	80	0.005	5			AC 41665
CTN98PT09	1155779	80	82	0.005	5			AC 41665
CTN98PT09	1155780	82	84	0.005	5			AC 41665
CTN98PT09	1155781	84	86	0.005	5			AC 41665
CTN98PT09	1155782	86	88	0.005	5			AC 41665
CTN98PT09	1155783	88	90	0.005	5			AC 41665
CTN98PT09	1155784	90	92	0.005	5			AC 41665
CTN98PT09	1155785	92	94	0.005	5			AC 41665
CTN98PT09	1155786	94	96	0.005	5			AC 41665
CTN98PT09	1155787	96	98	0.010	10			AC 41665
CTN98PT09	1155788	98	100	0.005	5			AC 41665
CTN98PT09	1155789	100	102	0.005	5			AC 41665
CTN98PT09	1155790	102	104	0.005	5			AC 41665
CTN98PT09	1155792	104	106	0.005	5			AC 41665
CTN98PT09	1155793	106	108	0.005	5			AC 41665
CTN98PT09	1155794	108	110	0.005	5			AC 41665
CTN98PT09	1155795	110	112	0.005	5			AC 41665
CTN98PT09	1155796	112	114	0.005	5			AC 41665
CTN98PT09	1155797	114	116	0.005	5			AC 41665
CTN98PT09	1155798	116	118	0.005	5			AC 41665

Hole	Samp	Fm	To	Au_ppm	Au_ppb	As	Bi	Batch
CTN98PT09	1155799	118	120	0.005	5			AC 41665
CTN98PT09	1155800	120	122	0.005	5			AC 41665
CTN98PT09	1155801	122	124	0.005	5			AC 41665
CTN98PT09	1155802	124	126	0.005	5			AC 41665
CTN98PT09	1155803	126	128	0.005	5			AC 41665
CTN98PT09	1155804	128	130	0.005	5			AC 41665
CTN98PT09	1155805	130	132	0.005	5			AC 41665
CTN98PT09	1155806	132	134	0.005	5			AC 41665
CTN98PT09	1155807	134	136	0.005	5			AC 41665
CTN98PT09	1155808	136	138	0.005	5			AC 41665
CTN98PT09	1155809	138	140	0.005	5			AC 41665
CTN98PT09	1155810	140	142	0.005	5			AC 41665
CTN98PT09	1155811	142	144	0.005	5			AC 41665
CTN98PT09	1155812	144	146	0.005	5			AC 41665
CTN98PT09	1155813	146	148	0.005	5			AC 41665
CTN98PT09	1155814	148	150	0.005	5			AC 41665
CTN98PT09	1155815	150	152	0.005	5			AC 41665
CTN98PT09	1155816	152	154	0.005	5			AC 41665
CTN98PT09	1155817	154	156	0.005	5			AC 41665
CTN98PT09	1155818	156	158	0.005	5			AC 41665
CTN98PT09	1155819	158	160	0.010	10			AC 41665
CTN98PT09	1155820	160	162	0.005	5			AC 41665
CTN98PT09	1155821	162	164	0.005	5			AC 41665
CTN98PT09	1155822	164	166	0.005	5			AC 41665
CTN98PT09	1155823	166	168	0.005	5			AC 41665
CTN98PT09	1155824	168	170	0.005	5			AC 41665
CTN98PT09	1155825	170	172	0.005	5			AC 41665
CTN98PT09	1155826	172	174	0.005	5			AC 41665
CTN98PT09	1155827	174	176	0.005	5			AC 41665
CTN98PT09	1155828	176	178	0.005	5			AC 41665
CTN98PT09	1155829	178	180	0.005	5			AC 41665
CTN98PT09	1155830	180	182	0.005	5			AC 41665

Hole	Samp	Fm	To	Au_ppm	Au_ppb	As	Bi	Batch
CTN98PT09	1155832	182	184	0.005	5			AC 41665
CTN98PT09	1155833	184	186	0.005	5			AC 41665
CTN98PT10	1155658	0	2	0.005	5			AC 41649
CTN98PT10	1155659	2	4	0.005	5			AC 41649
CTN98PT10	1155660	4	6	0.005	5			AC 41649
CTN98PT10	1155662	6	8	0.010	10			AC 41649
CTN98PT10	1155663	8	10	0.005	5			AC 41649
CTN98PT10	1155664	10	12	0.005	5			AC 41649
CTN98PT10	1155665	12	14	0.005	5			AC 41649
CTN98PT10	1155666	14	16	0.005	5			AC 41649
CTN98PT10	1155667	16	18	0.005	5			AC 41649
CTN98PT10	1155668	18	20	0.005	5			AC 41649
CTN98PT10	1155669	20	22	0.005	5			AC 41649
CTN98PT10	1155670	22	24	0.010	10			AC 41649
CTN98PT10	1155671	24	26	0.005	5			AC 41649
CTN98PT10	1155672	26	28	0.005	5			AC 41649
CTN98PT10	1155673	28	30	0.005	5			AC 41649
CTN98PT10	1155674	30	32	0.005	5			AC 41649
CTN98PT10	1155675	32	34	0.015	15			AC 41649
CTN98PT10	1155676	34	36	0.005	5			AC 41649
CTN98PT10	1155677	36	38	0.005	5			AC 41649
CTN98PT10	1155678	38	40	0.005	5			AC 41649
CTN98PT10	1155679	40	42	0.005	5			AC 41649
CTN98PT10	1155680	42	44	0.005	5			AC 41649
CTN98PT10	1155681	44	46	0.265	265			AC 41649
CTN98PT10	1155682	46	48	0.060	60			AC 41649
CTN98PT10	1155683	48	50	0.005	5			AC 41649
CTN98PT10	1155684	50	52	0.020	20			AC 41649
CTN98PT10	1155685	52	54	0.020	20			AC 41649
CTN98PT10	1155686	54	56	0.025	25			AC 41649
CTN98PT10	1155687	56	58	0.005	5			AC 41649
CTN98PT10	1155688	58	60	0.010	10			AC 41649

Hole	Samp	Fm	To	Au_ppm	Au_ppb	As	Bi	Batch
CTN98PT10	1155689	60	62	0.010	10			AC 41649
CTN98PT10	1155690	62	64	0.165	165			AC 41649
CTN98PT10	1155692	64	66	0.005	5			AC 41649
CTN98PT10	1155693	66	68	0.005	5			AC 41649
CTN98PT10	1155694	68	70	0.005	5			AC 41649
CTN98PT10	1155695	70	72	0.020	20			AC 41649
CTN98PT10	1155696	72	74	0.010	10			AC 41649
CTN98PT10	1155697	74	76	0.030	30			AC 41649
CTN98PT10	1155698	76	78	0.025	25			AC 41649
CTN98PT10	1155699	78	80	0.030	30			AC 41649
CTN98PT10	1155700	80	82	0.005	5			AC 41649
CTN98PT10	1155701	82	84	0.005	5			AC 41649
CTN98PT10	1155702	84	86	0.020	20			AC 41649
CTN98PT10	1155703	86	88	0.005	5			AC 41649
CTN98PT10	1155704	88	90	0.005	5			AC 41649
CTN98PT10	1155705	90	92	0.010	10			AC 41649
CTN98PT10	1155706	92	94	0.005	5			AC 41649
CTN98PT10	1155707	94	96	0.020	20			AC 41649
CTN98PT10	1155708	96	98	0.030	30			AC 41649
CTN98PT10	1155709	98	100	0.020	20			AC 41649
CTN98PT10	1155710	100	102	0.005	5			AC 41649
CTN98PT10	1155711	102	104	0.020	20			AC 41649
CTN98PT10	1155712	104	106	0.025	25			AC 41649
CTN98PT10	1155713	106	108	0.005	5			AC 41649
CTN98PT10	1155714	108	110	0.020	20			AC 41649
CTN98PT10	1155715	110	112	0.045	45			AC 41649
CTN98PT10	1155716	112	114	0.020	20			AC 41649
CTN98PT10	1155717	114	116	0.005	5			AC 41649
CTN98PT10	1155718	116	118	0.030	30			AC 41649
CTN98PT10	1155719	118	120	0.005	5			AC 41649
CTN98PT10	1155720	120	122	0.005	5			AC 41649
CTN98PT10	1155721	122	124	0.005	5			AC 41649

Hole	Samp	Fm	To	Au_ppm	Au_ppb	As	Bi	Batch
CTN98PT10	1155722	124	126	0.020	20			AC 41649
CTN98PT10	1155723	126	128	0.005	5			AC 41649
CTN98PT10	1155724	128	130	0.005	5			AC 41649
CTN98PT10	1155725	130	132	0.005	5			AC 41649
CTN98PT10	1155726	132	134	0.005	5			AC 41649
CTN98PT10	1155727	134	136	0.020	20			AC 41649
CTN98PT10	1155728	136	138	0.005	5			AC 41649
CTN98PT10	1155729	138	140	0.005	5			AC 41649
CTN98PT10	1155730	140	142	0.020	20			AC 41649
CTN98PT10	1155732	142	144	0.005	5			AC 41649
CTN98PT10	1155733	144	146	0.005	5			AC 41649
CTN98PT10	1155734	146	148	0.005	5			AC 41649
CTN98PT10	1155735	148	150	0.005	5			AC 41649
CTN98PT10	1155736	150	152	0.020	20			AC 41649
CTN98PT10	1155737	152	154	0.005	5			AC 41649
CTN98PT11	1155834	0	2	0.030	30			AC 41683
CTN98PT11	1155835	2	4	0.020	20			AC 41683
CTN98PT11	1155836	4	6	0.020	20			AC 41683
CTN98PT11	1155837	6	8	0.030	30			AC 41683
CTN98PT11	1155838	8	10	0.020	20			AC 41683
CTN98PT11	1155839	10	12	0.040	40			AC 41683
CTN98PT11	1155840	12	14	0.070	70			AC 41683
CTN98PT11	1155841	14	16	0.030	30			AC 41683
CTN98PT11	1155842	16	18	0.020	20			AC 41683
CTN98PT11	1155843	18	20	0.135	135			AC 41683
CTN98PT11	1155844	20	22	0.007	7			AC 41683
CTN98PT11	1155845	22	24	0.030	30			AC 41683
CTN98PT11	1155846	24	26	0.040	40			AC 41683
CTN98PT11	1155847	26	28	0.030	30			AC 41683
CTN98PT11	1155848	28	30	0.030	30			AC 41683
CTN98PT11	1155849	30	32	0.050	50			AC 41683
CTN98PT11	1155850	32	34	0.030	30			AC 41683

Hole	Samp	Fm	To	Au_ppm	Au_ppb	As	Bi	Batch
CTN98PT11	1155851	34	36	0.020	20			AC 41683
CTN98PT11	1155852	36	38	0.020	20			AC 41683
CTN98PT11	1155853	38	40	0.010	10			AC 41683
CTN98PT11	1155854	40	42	0.030	30			AC 41683
CTN98PT11	1155855	42	44	0.040	40			AC 41683
CTN98PT11	1155856	44	46	0.010	10			AC 41683
CTN98PT11	1155857	46	48	0.025	25			AC 41683
CTN98PT11	1155858	48	50	0.020	20			AC 41683
CTN98PT11	1155859	50	52	0.010	10			AC 41683
CTN98PT11	1155860	52	54	0.060	60			AC 41683
CTN98PT11	1155862	54	56	0.060	60			AC 41683
CTN98PT11	1155863	56	58	#Error	#Error			
CTN98PT11	1155864	58	60	#Error	#Error			
CTN98PT11	1155865	60	62	#Error	#Error			
CTN98PT11	1155866	62	64	#Error	#Error			
CTN98PT11	1155867	64	66	#Error	#Error			
CTN98PT11	1155868	66	68	#Error	#Error			
CTN98PT11	1155869	68	70	#Error	#Error			
CTN98PT11	1155870	70	72	#Error	#Error			
CTN98PT11	1155871	72	74	#Error	#Error			
CTN98PT11	1155872	74	76	#Error	#Error			
CTN98PT11	1155873	76	78	0.040	40			AC 41683
CTN98PT11	1155874	78	80	0.030	30			AC 41683
CTN98PT11	1155875	80	82	0.020	20			AC 41683
CTN98PT11	1155876	82	84	0.040	40			AC 41683
CTN98PT11	1155877	84	86	0.020	20			AC 41683
CTN98PT11	1155878	86	88	0.030	30			AC 41683
CTN98PT11	1155879	88	90	0.007	7			AC 41683
CTN98PT11	1155880	90	92	0.030	30			AC 41683
CTN98PT11	1155881	92	94	0.020	20			AC 41683
CTN98PT11	1155882	94	96	0.040	40			AC 41683
CTN98PT11	1155883	96	98	0.040	40			AC 41683

Hole	Samp	Fm	To	Au_ppm	Au_ppb	As	Bi	Batch
CTN98PT11	1155884	98	100	0.040	40			AC 41683
CTN98PT11	1155885	100	102	0.050	50			AC 41683
CTN98PT11	1155886	102	104	0.295	295			AC 41683
CTN98PT11	1155887	104	106	0.040	40			AC 41683
CTN98PT11	1155888	106	108	0.030	30			AC 41683
CTN98PT11	1155889	108	110	0.040	40			AC 41683
CTN98PT11	1155890	110	112	0.010	10			AC 41683
CTN98PT11	1155892	112	114	0.060	60			AC 41683
CTN98PT11	1155893	114	116	0.070	70			AC 41683
CTN98PT11	1155894	116	118	0.060	60			AC 41683
CTN98PT11	1155895	118	120	0.040	40			AC 41683
CTN98PT11	1155896	120	122	0.100	100			AC 41683
CTN98PT11	1155897	122	124	0.150	150			AC 41683
CTN98PT11	1155898	124	126	0.030	30			AC 41683
CTN98PT11	1155899	126	128	0.030	30			AC 41683
CTN98PT11	1155900	128	130	0.040	40			AC 41683
CTN98PT11	1155901	130	132	0.180	180			AC 41683
CTN98PT11	1155902	132	134	0.050	50			AC 41683
CTN98PT11	1155903	134	136	0.040	40			AC 41683
CTN98PT11	1155904	136	138	0.080	80			AC 41683
CTN98PT11	1155905	138	140	0.030	30			AC 41683
CTN98PT11	1155906	140	142	0.430	430			AC 41683
CTN98PT11	1155907	142	144	0.545	545			AC 41683
CTN98PT11	1155908	144	146	0.275	275			AC 41683
CTN98PT11	1155909	146	148	0.050	50			AC 41683
CTN98PT11	1155910	148	150	0.060	60			AC 41683
CTN98PT11	1155911	150	152	0.010	10			AC 41683
CTN98PT11	1155912	152	154	0.010	10			AC 41683
CTN98PT11	1155913	154	156	0.020	20			AC 41683
CTN98PT11	1155914	156	158	0.010	10			AC 41683
CTN98PT11	1155915	158	160	0.010	10			AC 41683
CTN98PT11	1155916	160	162	0.010	10			AC 41683

Hole	Samp	Fm	To	Au_ppm	Au_ppb	As	Bi	Batch
CTN98PT11	1155917	162	164	0.020	20			AC 41683
CTN98PT11	1155918	164	166	0.010	10			AC 41683
CTN98PT11	1155919	166	168	0.005	5			AC 41683
CTN98PT11	1155920	168	170	0.010	10			AC 41683
CTN98PT11	1155921	170	172	0.010	10			AC 41683
CTN98PT11	1155922	172	174	0.010	10			AC 41683
CTN98PT11	1155923	174	176	0.010	10			AC 41683
CTN98PT11	1155924	176	178	0.010	10			AC 41683
CTN98PT11	1155925	178	180	0.010	10			AC 41683
CTN98PT11	1155926	180	182	0.010	10			AC 41683
CTN98PT11	1155927	182	184	0.010	10			AC 41683
CTN98PT11	1155928	184	186	0.005	5			AC 41683
CTN98PT11	1155929	186	188	0.005	5			AC 41683
CTN98PT11	1155930	188	190	0.005	5			AC 41683
CTN98PT11	1155932	190	192	0.005	5			AC 41683
CTN98PT11	1155933	192	194	0.010	10			AC 41683
CTN98PT11	1155934	194	196	0.005	5			AC 41683
CTN98PT11	1155935	196	198	0.005	5			AC 41683
CTN98PT11	1155936	198	200	0.005	5			AC 41683
CTN98PT12	1155605	0	2	0.005	5			AC 41636
CTN98PT12	1155606	2	4	0.005	5			AC 41636
CTN98PT12	1155607	4	6	0.005	5			AC 41636
CTN98PT12	1155608	6	8	0.005	5			AC 41636
CTN98PT12	1155609	8	10	0.005	5			AC 41636
CTN98PT12	1155610	10	12	0.060	60			AC 41636
CTN98PT12	1155611	12	14	0.115	115			AC 41636
CTN98PT12	1155612	14	16	0.220	220			AC 41636
CTN98PT12	1155613	16	18	0.090	90			AC 41636
CTN98PT12	1155614	18	20	0.060	60			AC 41636
CTN98PT12	1155615	20	22	0.050	50			AC 41636
CTN98PT12	1155616	22	24	0.050	50			AC 41636
CTN98PT12	1155617	24	26	0.030	30			AC 41636

Hole	Samp	Fm	To	Au_ppm	Au_ppb	As	Bi	Batch
CTN98PT12	1155618	26	28	0.020	20			AC 41636
CTN98PT12	1155619	28	30	0.005	5			AC 41636
CTN98PT12	1155620	30	32	0.020	20			AC 41636
CTN98PT12	1155621	32	34	0.020	20			AC 41636
CTN98PT12	1155622	34	36	0.030	30			AC 41636
CTN98PT12	1155623	36	38	0.040	40			AC 41636
CTN98PT12	1155624	38	40	0.005	5			AC 41636
CTN98PT12	1155625	40	42	0.020	20			AC 41636
CTN98PT12	1155626	42	44	0.025	25			AC 41636
CTN98PT12	1155627	44	46	0.060	60			AC 41636
CTN98PT12	1155628	46	48	0.050	50			AC 41636
CTN98PT12	1155629	48	50	0.020	20			AC 41636
CTN98PT12	1155630	50	52	0.030	30			AC 41636
CTN98PT12	1155632	52	54	0.030	30			AC 41636
CTN98PT12	1155633	54	56	0.020	20			AC 41636
CTN98PT12	1155634	56	58	0.005	5			AC 41636
CTN98PT12	1155635	58	60	0.020	20			AC 41636
CTN98PT12	1155636	60	62	0.020	20			AC 41636
CTN98PT12	1155637	62	64	0.005	5			AC 41636
CTN98PT12	1155638	64	66	0.005	5			AC 41636
CTN98PT12	1155639	66	68	0.005	5			AC 41636
CTN98PT12	1155640	68	70	0.005	5			AC 41636
CTN98PT12	1155641	70	72	0.005	5			AC 41636
CTN98PT12	1155642	72	74	0.005	5			AC 41636
CTN98PT12	1155643	74	76	0.005	5			AC 41636
CTN98PT12	1155644	76	78	0.005	5			AC 41636
CTN98PT12	1155645	78	80	0.005	5			AC 41636
CTN98PT12	1155646	80	82	0.005	5			AC 41636
CTN98PT12	1155647	82	84	0.005	5			AC 41636
CTN98PT12	1155648	84	86	0.005	5			AC 41636
CTN98PT12	1155649	86	88	0.005	5			AC 41636
CTN98PT12	1155650	88	90	0.005	5			AC 41636

Hole	Samp	Fm	To	Au_ppm	Au_ppb	As	Bi	Batch
CTN98PT12	1155651	90	92	0.005	5			AC 41636
CTN98PT12	1155652	92	94	0.005	5			AC 41636
CTN98PT12	1155653	94	96	0.005	5			AC 41636
CTN98PT12	1155654	96	98	0.005	5			AC 41636
CTN98PT12	1155655	98	100	0.005	5			AC 41636
CTN98PT12	1155656	100	102	0.005	5			AC 41636
CTN98PT12	1155657	102	104	0.005	5			AC 41636

Surface Sample Ledger

Sample	AMG North	AMG East	Samp Type	Mesh Size	From	To	Cover Colour	Cover Type	Samp Colour	Major Rock	Minor Rock	Coarse Fraction	Terrain	Comments
261695			ROCKCHIP		103	100			WH	QV				20CM TR QZ VEIN WITH SHALLOW DIP IN WETYH SILTSTONE
261696			ROCKCHIP		100	103			RD	CL				RED CLAY ZONE, ALT SELVAGE OF AR QZ VEIN
261697			ROCKCHIP		114	118			WH	QV				LOW ANGLE TR QZ VEINS IN CLAYEY RD SEDIMENTS
261698			ROCKCHIP		142	140			RD	CL				RED YELLOW CLAYEY BEDROCK POSS INTENSLY ALT
261699			ROCKCHIP		152	150			RD	CL				HM ALT HIGHLY WETH SEDIMENTS WITH MINOR QZ VEINING
261700			ROCKCHIP		46	47			RD	QV				QV VEIN 15-20CM WIDE SUB PARALEL TO BEDDING , IN COR SCHIST
261738			ROCKCHIP		26	27			WH	CL				WH INTENSE CLAY ALT OF SILTSTONE
261739			ROCKCHIP		39	40			RD	QV				QZ VEIN SUB PARALEL TO BEDDING IN CLAYEY SEDS
261740			ROCKCHIP		100	100			RD	GW				HM SI ALT FO GREYWACKE WITH SMALL 1-3CMM MI QZ VEINS

ASSAYCORP

eport Code: ..... AC 42522
mples Received: 27/07/98
Number of Samples: 19

cacia Resources Limited
7-66 Coonawarra Rd
Winnellie NT 0821

ference: 003163
Project: .....
st Code: 261695-261749

Assaycorp Pty Ltd
A.C.N. 052 982 911
174 Ward St
PINE CREEK NT 0847
Ph (08) 8976 1262
Fax (08) 8976 1310

Report Distribution
L.Stirland-Mitchell

mple Preparation:

say Data:

Analysis	Analytical Method	Digest	Technique	Precision & Accuracy	Detection Limit	Data Units
Au	FA50	FA	AAS	Acc. ± 15 %	0.01	ppm
Au(R)	FA50	FA	AAS	Acc. ± 15 %	0.01	ppm

ors Comment: This cover sheet is an integral part of the report. This report can only be reproduced

Authorisation: Ray Woolbridge

ASSAYCORP

ASSAY CODE: AC 42522

Sample	Au (ppm)	Au(R) (ppm)
261695	<0.01	
261696	0.66	0.63
261697	<0.01	
261698	0.10	
261699	<0.01	
261700	0.03	
[illegible]		
261738	0.09	
261739	0.46	0.49
261740	0.08	
[illegible]	[illegible]	
[illegible]	[illegible]	
[illegible]	[illegible]	
[illegible]	[illegible]	
[illegible]	[illegible]	
[illegible]	[illegible]	
[illegible]	[illegible]	
[illegible]	[illegible]	
[illegible]	[illegible]	
[illegible]	[illegible]	

APPENDIX 3

Drill Ledgers
&
Assay Results

Acacia Exploration
Geological Logging Codes

RETURN

%	Of Return

WATER

D	Dry
M	Moist
W	Wet
B	Blowndry
I	Injected

HARDNESS

VH	Very Hard
H	Hard
M	Medium
S	Soft
VS	Very Soft

COLOR

Qualifier

DK	Dark
LT	Light

BE	Beige
BG	Blue/green
BK	Black
BL	Blue
BN	Brown
CM	Cream
GN	Green
GY	Grey
KK	Khaki
MS	Mustard
OG	Orange
PI	Pink
PP	Purple
RD	Red
TN	Tan
WH	White
YE	Yellow

e.g BNGN, LTBN

TEXTURE

Qualifier

ST	Strong
MD	Moderate
WK	Weak

Sedimentary

IB	Interbedded
LM	Laminated
LY	Layered

TEXTURE Ctd.

Metamorphic

CR	Crenulated
MY	Mylonitic
PB	Porphroblastic
SC	Schistose

Igneous

AC	Acicular
AM	Amygdaloidal
AN	Aphanitic
EQ	Equigranular
PO	Porphyritic
PW	Pillows

Structural

BO	Boxwork
BX	Brecciated
FD	Folded
FO	Foliated
FR	Fractured
LI	Lineated
RO	Rodded
SH	Sheared
SL	Slickenslides

Others

CX	Crystalline
CO	Competant
FB	Fibrous
GO	Gossanous
MS	Massive
PT	Platy
PS	Porous
SA	Saccaroidal
SB	Solution Bands

GRAINSIZE

FN	Fine - not visible to naked eye
MD	Medium - visible to naked eye
CS	Coarse - >2mm

NB. Hyphenate for two rock types in one interval
ie Shale/ greywacke - FN/MD
Otherwise only one code per rocktype

WEATH (Weathering)

EW	Extremely weathered with poor textural preservation
HW	Highly weathered with moderate textural preservation
MW	Moderately weathered with good textural preservation
SW	Slightly weathered with < 20% oxides
FR	Fresh Bedrock

REGOLITH

TR	Transported
TL	Laterite
US	Upper Saprolite
RX	Redox Front
LS	Lower Saprolite
WB	Weathered Bedrock
BR	Bedrock (fresh)
SA	Saprolite (undifferentiated)

Overprints

MT	Mottling
CT	Calcrete
ST	Silcrete
FT	Ferricrete
GT	Goethite
HM	Haematite

e.g. USMT, USGT

ROCKTYPE

Sedimentary

AG	Agglomerate
BX	Breccia
CG	Conglomerate
CH	Chert
DO	Dolomite
EE	Epiclastic
CB	Carbonate
CSH	Carbonaceous Shale
CSI	Carbonaceous Siltstone
GS	Graphitic Shale
GW	Greywacke (>15%matrix)
HS	Haematitic Shale
LM	Limestone
SH	Shale
SI	Siltstone
SS	Sandstone
TF	Tuff

Igneous

VA	Acid Volcanic
VB	Basic Volcanic
VI	Intermediate Volcanic
EB	Basalt
DL	Dolerite
GB	Gabbro
FI	Felsic Intrusive (undiff)
MI	Mafic Intrusive (undiff)
GR	Granite (undiff)
PG	Pegmatite
PO	Porphyry
AP	Aplite
GRA	Alkali Granite
GRD	Granodiorite

Metamorphic

AM	Amphibolite
GN	Gneiss
HF	Hornfels
PH	Phyllite
SC	Schist
SL	Slate
QT	Quartzite
SSM	Metasediment
QC	Quartz Carbonate

ROCKTYPE Ctd.

Other

CL	Clay
GV	Gravel
GO	Gossan
IS	Ironstone
QV	Massive Quartz Vein
MK	Mullock
PI	Pisolitic Gravel
SD	Sand

ALT STYLE

Qualifier

WK	Weak
MD	Moderate
ST	Strong
IN	Intense

DM	Disseminated
PV	Pervasive
PT	Patchy
SV	Selvedge
VN	Vein

e.g. STDM, MRSV

ALT TYPE

AB	Albite
AD	Andalusite
AM	Amphibole
AT	Altered (undiff)
BI	Biotite
BL	Bleaching (cb-si)
CB	Carbonate
CH	Chlorite
CL	Clay
CW	Clay Weathering
EP	Epidote
FE	Iron
FL	Fluorine
GP	Graphite
GA	Garnet
GT	Goethite
GN	Green Alteration
HM	Haematite
KY	Kyanite
LI	Limonite
KS	K-Feldspar
MI	Mica
MN	Manganese
MT	Magnetite
MU	Muscovite
PH	Phlogopite
PL	Plagioclase
PY	Pyrite
SE	Sericite
SI	Silica
SR	Siderite
TC	Talc
TE	Tremolite
TM	Tourmaline
ZE	Zeolite

Acacia Exploration
Geological Logging Codes Ctd.

VEIN STYLE

BK	Buck
BX	Breccia
CB	Comb
CH	Chalcedonic
FB	Fibrous
MI	Milky
RB	Ribbon
SA	Saccharoidal
ST	Stringer
SM	Smoky
TR	Translucent
LM	Laminated
SW	Stock Work

NB: (i) For other veins use appropriate code e.g. PY, AS

(ii) % veining must be expressed as a numeric e.g. 0.5,1, 5 etc.

VEIN TYPE

CB	Carbonate
CH	Chert
QZ	Quartz
PY	Pyrite

MINERALISATION

AS	Arsenopyrite
AZ	Azurite
AU	Gold
BI	Biotite
BO	Bornite
CB	Carbonate (undiff)
CC	Chalcocite
CN	Native-Copper
CP	Chalcopyrite
CU	Cuprite
CV	Covellite
GA	Galena
GR	Garnet
GT	Goethite
HM	Haematite
MA	Malachite
MF	Fine Black Mineral
MN	Manganese
PO	Pyrrhotite
PY	Pyrite
SP	Sphalerite

NB: Mineral content must be expressed as a numeric e.g 0.5, 1, 5 etc.

STRUCTURAL DEFECTS (Geotech)

BE	Bedding
CG	Cleavage
DK	Dyke
FA	Fold Axis
FH	Fold Hinge
FT	Fault
JO	Joint
FR	Fractured Zone
FG	Fragmented Zone
LI	Lineation
SC	Schistosity
SH	Shear Zone
VS	Vein Stockwork
VN	Vein
FV	Fractured Vein
VB	Brecciated Vein
BK	Broken Zone

ROCK STRENGTH (Geotech)

VW	Very Weak
W	Weak
M	Medium Strong
S	Strong
VS	Very Strong

ROUGHNESS (Geotech)

K	Slickenslided
P	Polished
S	Smooth
R	Rough

BROKEN ZONE (Geotech)

N	Natural
H	Heated
D	Drill Induced

FRACTURING (Geotech)

WF	Weak, core pieces 1m-200m
MF	Mod. core pieces 10-20cm
SF	Strong, core pieces 5-10cm
BK	Broken core, 25 cm pieces

SHAPE (Geotech)

P	Planar
U	Undulating
S	Stepped

Logging Notes:

(1) Only **one** logging code to be entered per field (excluding qualifiers and two colours where necessary).

(2) **No new codes** to be entered without notification and approval.

(3) **No backslashes, commas, hyphens** etc. to be used in any field except Comments.

(4) Quartz Veining and Mineral content must be expressed as a **numeral** (not Trace, Tr etc.)

(5) Hole Numbers must be entered correctly using the appropriate prefix and four digit number.

(6) All geological logs **must** be validated prior to entry onto Access Dbase.

Collar Report :- NOMINAL.

Hole	*Depth*	*Grid_n*	*Grid_e*	*AMG_n*	*AMG_e*	*RL*	*Date*	*Comments*
RC97PT07	82	14500.000	9650.000	8467730.343	813148.786		22/09/97	
RC97PT08	82	14500.000	9620.000	8467714.445	813123.344		23/09/97	
RC97PT09	82	14500.000	9590.000	8467698.548	813097.903		24/09/97	
RC97PT10	100	14400.000	9600.000	8467619.042	813159.375		26/09/97	
RC97PT11	112	14400.000	9560.000	8467597.845	813125.453		27/09/97	
RC97PT12	106	14400.000	9518.000	8467575.589	813089.835		28/09/97	
RC97PT13	100	14400.000	9480.000	8467555.452	813057.609		29/09/97	
RC97PT14	100	14200.000	9615.000	8467457.381	813278.080		30/09/97	
RC97PT15	100	14200.000	9575.000	8467436.184	813244.158		02/10/97	
RC97PT16	100	14200.000	9535.000	8467414.987	813210.236		06/10/97	
RC97PT18	100	14000.000	9660.000	8467311.618	813422.226		09/10/97	
RC97PT19	106	14000.000	9620.000	8467290.421	813388.304		11/10/97	

Collar Report :- SURVEY PICK UP.

Hole	Depth	Grid_n	Grid_e	AMG_n	AMG_e	RL	Date	Comments
CTN98PT08	198	13995.000	9652.000	8467303.138	813418.091		27/05/98	
CTN98PT09	186	14695.000	9508.000	8467820.464	812925.029		27/05/98	
CTN98PT10	154	14895.000	9486.000	8467978.415	812800.388		27/05/98	
CTN98PT11	200	15195.000	9390.000	8468181.958	812559.999		27/05/98	
CTN98PT12	104	15395.000	9448.000	8468382.303	812503.202		27/05/98	
RC97PT07	82	14466.610	9682.580	8467719.291	813194.109	95.22	22/09/97	
RC97PT08	82	14466.180	9651.260	8467702.329	813167.776	96.72	23/09/97	
RC97PT09	82	14465.080	9621.000	8467685.361	813142.697	98.08	24/09/97	
RC97PT10	100	14369.700	9641.540	8467615.359	813210.660	97.35	26/09/97	
RC97PT11	112	14367.700	9600.180	8467591.745	813176.644	96.68	27/09/97	
RC97PT12	106	14367.190	9559.810	8467569.920	813142.679	95.14	28/09/97	
RC97PT13	100	14365.590	9520.360	8467547.658	813110.071	94.02	29/09/97	
RC97PT14	100	14169.890	9658.990	8467455.157	813331.341	97.57	30/09/97	
RC97PT15	100	14168.790	9619.140	8467433.107	813298.129	96.71	02/10/97	
RC97PT16	100	14167.700	9579.150	8467410.991	813264.794	94.46	06/10/97	
RC97PT18	100	13958.410	9682.850	8467288.456	813463.643	96.83	09/10/97	
RC97PT19	106	13958.870	9642.450	8467267.437	813429.138	95.56	11/10/97	

Downhole Survey Report

Hole	Depth	Grid	Dip	Grid Azim	Mag Azim	Date	Comments
RC97PT07	0	AMG52_84	-60	90	54	9/22/1997	
RC97PT07	76	DPCBNROOK	-58	90	54	9/23/1997	
RC97PT07	82	AMG52_84	-60	90	54	9/22/1997	
RC97PT08	0	AMG52_84	-60	90	54	9/23/1997	
RC97PT08	76	DPCBNROOK	-62	90	54	9/24/1997	
RC97PT08	82	AMG52_84	-60	90	54	9/23/1997	
RC97PT09	0	AMG52_84	-60	90	54	9/24/1997	
RC97PT09	40	DPCBNROOK	-63	90	54	9/25/1997	
RC97PT09	76	DPCBNROOK	-66	90	54	9/25/1997	
RC97PT09	82	AMG52_84	-60	90	54	9/24/1997	
RC97PT10	0	AMG52_84	-60	90	54	9/26/1997	
RC97PT10	46	DPCBNROOK	-64	90	54	9/26/1997	
RC97PT10	94	DPCBNROOK	-65	90	54	9/26/1997	
RC97PT10	100	AMG52_84	-60	90	54	9/26/1997	
RC97PT11	0	AMG52_84	-60	90	54	9/27/1997	
RC97PT11	106	DPCBNROOK	-63	90	54	9/27/1997	
RC97PT11	112	AMG52_84	-60	90	54	9/27/1997	
RC97PT12	0	AMG52_84	-60	90	54	9/28/1997	
RC97PT12	52	DPCBNROOK	-61	90	54	9/29/1997	
RC97PT12	100	DPCBNROOK	-65	90	54	9/29/1997	
RC97PT12	106	AMG52_84	-60	90	54	9/28/1997	
RC97PT13	0	AMG52_84	-60	90	54	9/29/1997	
RC97PT13	94	DPCBNROOK	-62	90	54	9/30/1997	
RC97PT13	100	AMG52_84	-60	90	54	9/29/1997	
RC97PT14	0	AMG52_84	-60	90	54	9/30/1997	
RC97PT14	94	DPCBNROOK	-60	90	54	10/1/1997	
RC97PT14	100	AMG52_84	-60	90	54	9/30/1997	
RC97PT15	0	AMG52_84	-60	90	54	10/2/1997	
RC97PT15	94	DPCBNROOK	-64	90	54	10/3/1997	
RC97PT15	100	AMG52_84	-60	90	54	10/2/1997	
RC97PT16	0	AMG52_84	-60	90	54	10/6/1997	

Hole	Depth	Grid	Dip	Grid Azim	Mag Azim	Date	Comments
RC97PT16	94	DPCBNROOK	-59	90	54	10/7/1997	
RC97PT16	100	AMG52_84	-60	90	54	10/6/1997	
RC97PT18	0	AMG52_84	-60	90	54	10/9/1997	
RC97PT18	94	DPCBNROOK	-58	90	54	10/9/1997	
RC97PT18	100	AMG52_84	-60	90	54	10/9/1997	
RC97PT19	0	AMG52_84	-60	90	54	10/11/1997	
RC97PT19	100	DPCBNROOK	-60	90	54	10/11/1997	
RC97PT19	106	AMG52_84	-60	90	54	10/11/1997	

DrillHole Assay Report

Hole	Samp	Fm	To	Au_ppm	Au_ppb	As	Bi	Batch
RC97PT07	1231701	0	1	0.010	10			7DN2121
RC97PT07	1231702	1	2	0.030	30			7DN2121
RC97PT07	1231703	2	3	0.010	10			7DN2121
RC97PT07	1231704	3	4	0.030	30			7DN2121
RC97PT07	1231705	4	5	0.030	30			7DN2121
RC97PT07	1231706	5	6	0.030	30			7DN2121
RC97PT07	1231707	6	7	0.010	10			7DN2121
RC97PT07	1231708	7	8	0.030	30			7DN2121
RC97PT07	1231709	8	9	0.030	30			7DN2121
RC97PT07	1231710	9	10	0.010	10			7DN2121
RC97PT07	1231711	10	11	0.030	30			7DN2121
RC97PT07	1231712	11	12	0.030	30			7DN2121
RC97PT07	1231713	12	13	0.010	10			7DN2121
RC97PT07	1231714	13	14	0.030	30			7DN2121
RC97PT07	1231715	14	15	0.035	35			7DN2121
RC97PT07	1231716	15	16	0.040	40			7DN2121
RC97PT07	1231717	16	17	0.018	18			7DN2121
RC97PT07	1231718	17	18	0.023	23			7DN2121
RC97PT07	1231719	18	19	0.023	23			7DN2121
RC97PT07	1231720	19	20	0.005	5			7DN2121
RC97PT07	1231721	20	21	0.005	5			7DN2121
RC97PT07	1231722	21	22	0.005	5			7DN2121
RC97PT07	1231723	22	23	0.005	5			7DN2121
RC97PT07	1231724	23	24	0.005	5			7DN2121
RC97PT07	1231725	24	25	0.005	5			7DN2121
RC97PT07	1231726	25	26	0.010	10			7DN2121
RC97PT07	1231727	26	27	0.110	110			7DN2121
RC97PT07	1231728	27	28	0.018	18			7DN2121
RC97PT07	1231729	28	29	0.010	10			7DN2121
RC97PT07	1231730	29	30	0.010	10			7DN2121

Hole	Samp	Fm	To	Au_ppm	Au_ppb	As	Bi	Batch
RC97PT07	1231732	30	31	0.005	5			7DN2121
RC97PT07	1231733	31	32	0.010	10			7DN2121
RC97PT07	1231734	32	33	0.010	10			7DN2121
RC97PT07	1231735	33	34	0.010	10			7DN2121
RC97PT07	1231736	34	35	0.018	18			7DN2121
RC97PT07	1231737	35	36	0.010	10			7DN2121
RC97PT07	1231738	36	37	0.010	10			7DN2121
RC97PT07	1231739	37	38	0.007	7			7DN2121
RC97PT07	1231740	38	39	0.005	5			7DN2121
RC97PT07	1231741	39	40	0.005	5			7DN2121
RC97PT07	1231742	40	41	0.010	10			7DN2121
RC97PT07	1231743	41	42	0.010	10			7DN2121
RC97PT07	1231744	42	43	0.010	10			7DN2121
RC97PT07	1231745	43	44	0.007	7			7DN2121
RC97PT07	1231746	44	45	0.010	10			7DN2121
RC97PT07	1231747	45	46	0.010	10			7DN2121
RC97PT07	1231748	46	47	0.010	10			7DN2121
RC97PT07	1231749	47	48	0.005	5			7DN2121
RC97PT07	1231750	48	49	0.010	10			7DN2121
RC97PT07	1231751	49	50	0.010	10			7DN2121
RC97PT07	1231752	50	51	0.010	10			7DN2121
RC97PT07	1231753	51	52	0.005	5			7DN2121
RC97PT07	1231754	52	53	0.005	5			7DN2121
RC97PT07	1231755	53	54	0.010	10			7DN2121
RC97PT07	1231756	54	55	0.010	10			7DN2121
RC97PT07	1231757	55	56	0.010	10			7DN2121
RC97PT07	1231758	56	57	0.010	10			7DN2121
RC97PT07	1231759	57	58	0.007	7			7DN2121
RC97PT07	1231760	58	59	0.005	5			7DN2121
RC97PT07	1231762	59	60	0.010	10			7DN2121
RC97PT07	1231763	60	61	0.005	5			7DN2121
RC97PT07	1231764	61	62	0.005	5			7DN2121

Hole	Samp	Fm	To	Au_ppm	Au_ppb	As	Bi	Batch
RC97PT07	1231765	62	63	0.010	10			7DN2121
RC97PT07	1231766	63	64	0.010	10			7DN2121
RC97PT07	1231767	64	65	0.010	10			7DN2121
RC97PT07	1231768	65	66	0.010	10			7DN2121
RC97PT07	1231769	66	67	0.005	5			7DN2121
RC97PT07	1231770	67	68	0.010	10			7DN2121
RC97PT07	1231771	68	69	0.010	10			7DN2121
RC97PT07	1231772	69	70	0.005	5			7DN2121
RC97PT07	1231773	70	71	0.010	10			7DN2121
RC97PT07	1231774	71	72	0.030	30			7DN2121
RC97PT07	1231775	72	73	0.005	5			7DN2121
RC97PT07	1231776	73	74	0.005	5			7DN2121
RC97PT07	1231777	74	75	0.010	10			7DN2121
RC97PT07	1231778	75	76	0.010	10			7DN2121
RC97PT07	1231779	76	77	0.007	7			7DN2121
RC97PT07	1231780	77	78	0.005	5			7DN2121
RC97PT07	1231781	78	79	0.010	10			7DN2121
RC97PT07	1231782	79	80	0.010	10			7DN2121
RC97PT07	1231783	80	81	0.010	10			7DN2121
RC97PT07	1231784	81	82	0.005	5			7DN2121
RC97PT08	1231785	0	1	0.005	5			7DN2127
RC97PT08	1231786	1	2	0.005	5			7DN2127
RC97PT08	1231787	2	3	0.005	5			7DN2127
RC97PT08	1231788	3	4	0.005	5			7DN2127
RC97PT08	1231789	4	5	0.005	5			7DN2127
RC97PT08	1231790	5	6	0.005	5			7DN2127
RC97PT08	1231792	6	7	0.005	5			7DN2127
RC97PT08	1231793	7	8	0.005	5			7DN2127
RC97PT08	1231794	8	9	0.005	5			7DN2127
RC97PT08	1231795	9	10	0.005	5			7DN2127
RC97PT08	1231796	10	11	0.005	5			7DN2127
RC97PT08	1231797	11	12	0.005	5			7DN2127

Hole	Samp	Fm	To	Au_ppm	Au_ppb	As	Bi	Batch
RC97PT08	1231798	12	13	0.005	5			7DN2127
RC97PT08	1231799	13	14	0.005	5			7DN2127
RC97PT08	1231800	14	15	0.005	5			7DN2127
RC97PT08	1231801	15	16	0.005	5			7DN2127
RC97PT08	1231802	16	17	0.005	5			7DN2127
RC97PT08	1231803	17	18	0.005	5			7DN2127
RC97PT08	1231804	18	19	0.005	5			7DN2127
RC97PT08	1231805	19	20	0.005	5			7DN2127
RC97PT08	1231806	20	21	0.005	5			7DN2127
RC97PT08	1231807	21	22	0.005	5			7DN2127
RC97PT08	1231808	22	23	0.005	5			7DN2127
RC97PT08	1231809	23	24	0.005	5			7DN2127
RC97PT08	1231810	24	25	0.005	5			7DN2127
RC97PT08	1231811	25	26	0.005	5			7DN2127
RC97PT08	1231812	26	27	0.005	5			7DN2127
RC97PT08	1231813	27	28	0.005	5			7DN2127
RC97PT08	1231814	28	29	0.005	5			7DN2127
RC97PT08	1231815	29	30	0.005	5			7DN2127
RC97PT08	1231816	30	31	0.005	5			7DN2127
RC97PT08	1231817	31	32	0.005	5			7DN2127
RC97PT08	1231818	32	33	0.005	5			7DN2127
RC97PT08	1231819	33	34	0.005	5			7DN2127
RC97PT08	1231820	34	35	0.005	5			7DN2127
RC97PT08	1231821	35	36	0.005	5			7DN2127
RC97PT08	1231822	36	37	0.005	5			7DN2127
RC97PT08	1231823	37	38	0.005	5			7DN2127
RC97PT08	1231824	38	39	0.005	5			7DN2127
RC97PT08	1231825	39	40	0.005	5			7DN2127
RC97PT08	1231826	40	41	0.005	5			7DN2127
RC97PT08	1231827	41	42	0.005	5			7DN2127
RC97PT08	1231828	42	43	0.005	5			7DN2127
RC97PT08	1231829	43	44	0.005	5			7DN2127

Hole	Samp	Fm	To	Au_ppm	Au_ppb	As	Bi	Batch
RC97PT08	1231830	44	45	0.005	5			7DN2127
RC97PT08	1231832	45	46	0.005	5			7DN2127
RC97PT08	1231833	46	47	0.005	5			7DN2127
RC97PT08	1231834	47	48	0.005	5			7DN2127
RC97PT08	1231835	48	49	0.005	5			7DN2127
RC97PT08	1231836	49	50	0.005	5			7DN2127
RC97PT08	1231837	50	51	0.005	5			7DN2127
RC97PT08	1231838	51	52	0.005	5			7DN2127
RC97PT08	1231839	52	53	0.005	5			7DN2127
RC97PT08	1231840	53	54	0.005	5			7DN2127
RC97PT08	1231841	54	55	0.440	440			7DN2127
RC97PT08	1231842	55	56	0.260	260			7DN2127
RC97PT08	1231843	56	57	0.060	60			7DN2127
RC97PT08	1231844	57	58	0.030	30			7DN2127
RC97PT08	1231845	58	59	0.030	30			7DN2127
RC97PT08	1231846	59	60	0.020	20			7DN2127
RC97PT08	1231847	60	61	0.060	60			7DN2127
RC97PT08	1231848	61	62	0.010	10			7DN2127
RC97PT08	1231849	62	63	0.005	5			7DN2127
RC97PT08	1231850	63	64	0.005	5			7DN2127
RC97PT08	1231851	64	65	0.005	5			7DN2127
RC97PT08	1231852	65	66	0.005	5			7DN2127
RC97PT08	1231853	66	67	0.005	5			7DN2127
RC97PT08	1231854	67	68	0.005	5			7DN2127
RC97PT08	1231855	68	69	0.005	5			7DN2127
RC97PT08	1231856	69	70	0.005	5			7DN2127
RC97PT08	1231857	70	71	0.005	5			7DN2127
RC97PT08	1231858	71	72	0.005	5			7DN2127
RC97PT08	1231859	72	73	0.005	5			7DN2127
RC97PT08	1231860	73	74	0.005	5			7DN2127
RC97PT08	1231862	74	75	0.005	5			7DN2127
RC97PT08	1231863	75	76	0.005	5			7DN2127

Hole	Samp	Fm	To	Au_ppm	Au_ppb	As	Bi	Batch
RC97PT08	1231864	76	77	0.005	5			7DN2127
RC97PT08	1231865	77	78	0.005	5			7DN2127
RC97PT08	1231866	78	79	0.005	5			7DN2127
RC97PT08	1231867	79	80	0.005	5			7DN2127
RC97PT08	1231868	80	81	0.005	5			7DN2127
RC97PT08	1231869	81	82	0.005	5			7DN2127
RC97PT09	1231870	0	2	0.020	20			7DN2138
RC97PT09	1231871	2	3	0.020	20			7DN2138
RC97PT09	1231872	3	4	0.080	80			7DN2138
RC97PT09	1231873	4	5	0.030	30			7DN2138
RC97PT09	1231874	5	6	0.050	50			7DN2138
RC97PT09	1231875	6	7	0.055	55			7DN2138
RC97PT09	1231876	7	8	0.060	60			7DN2138
RC97PT09	1231877	8	9	0.030	30			7DN2138
RC97PT09	1231878	9	10	0.020	20			7DN2138
RC97PT09	1231879	10	11	0.020	20			7DN2138
RC97PT09	1231880	11	12	0.020	20			7DN2138
RC97PT09	1231881	12	13	0.020	20			7DN2138
RC97PT09	1231882	13	14	0.020	20			7DN2138
RC97PT09	1231883	14	15	0.020	20			7DN2138
RC97PT09	1231884	15	16	0.030	30			7DN2138
RC97PT09	1231885	16	17	0.040	40			7DN2138
RC97PT09	1231886	17	18	0.020	20			7DN2138
RC97PT09	1231887	18	19	0.060	60			7DN2138
RC97PT09	1231888	19	20	0.130	130			7DN2138
RC97PT09	1231889	20	21	0.030	30			7DN2138
RC97PT09	1231890	21	22	0.020	20			7DN2138
RC97PT09	1231892	22	23	0.005	5			7DN2138
RC97PT09	1231893	23	24	0.030	30			7DN2138
RC97PT09	1231894	24	25	0.030	30			7DN2138
RC97PT09	1231895	25	26	0.020	20			7DN2138
RC97PT09	1231896	26	27	0.020	20			7DN2138

Hole	Samp	Fm	To	Au_ppm	Au_ppb	As	Bi	Batch
RC97PT09	1231897	27	28	0.020	20			7DN2138
RC97PT09	1231898	28	29	0.010	10			7DN2138
RC97PT09	1231899	29	30	0.015	15			7DN2138
RC97PT09	1231900	30	31	0.020	20			7DN2138
RC97PT09	1231901	31	32	0.020	20			7DN2138
RC97PT09	1231902	32	33	0.020	20			7DN2138
RC97PT09	1231903	33	34	0.020	20			7DN2138
RC97PT09	1231904	34	35	0.030	30			7DN2138
RC97PT09	1231905	35	36	0.020	20			7DN2138
RC97PT09	1231906	36	37	0.020	20			7DN2138
RC97PT09	1231907	37	38	0.030	30			7DN2138
RC97PT09	1231908	38	39	0.020	20			7DN2138
RC97PT09	1231909	39	40	0.020	20			7DN2138
RC97PT09	1231910	40	41	0.020	20			7DN2138
RC97PT09	1231911	41	42	0.005	5			7DN2138
RC97PT09	1231912	42	43	0.005	5			7DN2138
RC97PT09	1231913	43	44	0.005	5			7DN2138
RC97PT09	1231914	44	45	0.005	5			7DN2138
RC97PT09	1231915	45	46	0.030	30			7DN2138
RC97PT09	1231916	46	47	0.005	5			7DN2138
RC97PT09	1231917	47	48	0.005	5			7DN2138
RC97PT09	1231918	48	49	0.005	5			7DN2138
RC97PT09	1231919	49	50	0.005	5			7DN2138
RC97PT09	1231920	50	51	0.005	5			7DN2138
RC97PT09	1231921	51	52	0.005	5			7DN2138
RC97PT09	1231922	52	53	0.005	5			7DN2138
RC97PT09	1231923	53	54	0.005	5			7DN2138
RC97PT09	1231924	54	55	0.005	5			7DN2138
RC97PT09	1231925	55	56	0.005	5			7DN2138
RC97PT09	1231926	56	57	0.005	5			7DN2138
RC97PT09	1231927	57	58	0.005	5			7DN2138
RC97PT09	1231928	58	59	0.005	5			7DN2138

Hole	Samp	Fm	To	Au_ppm	Au_ppb	As	Bi	Batch
RC97PT09	1231929	59	60	0.005	5			7DN2138
RC97PT09	1231930	60	61	0.005	5			7DN2138
RC97PT09	1231932	61	62	0.005	5			7DN2138
RC97PT09	1231933	62	63	0.005	5			7DN2138
RC97PT09	1231934	63	64	0.005	5			7DN2138
RC97PT09	1231935	64	65	0.005	5			7DN2138
RC97PT09	1231936	65	66	0.005	5			7DN2138
RC97PT09	1231937	66	67	0.005	5			7DN2138
RC97PT09	1231938	67	68	0.005	5			7DN2138
RC97PT09	1231939	68	69	0.005	5			7DN2138
RC97PT09	1231940	69	70	0.005	5			7DN2138
RC97PT09	1231941	70	71	0.480	480			7DN2138
RC97PT09	1231942	71	72	0.005	5			7DN2138
RC97PT09	1231943	72	73	0.005	5			7DN2138
RC97PT09	1231944	73	74	0.005	5			7DN2138
RC97PT09	1231945	74	75	0.005	5			7DN2138
RC97PT09	1231946	75	76	0.005	5			7DN2138
RC97PT09	1231947	76	77	0.005	5			7DN2138
RC97PT09	1231948	77	78	0.005	5			7DN2138
RC97PT09	1231949	78	79	0.005	5			7DN2138
RC97PT09	1231950	79	80	0.005	5			7DN2138
RC97PT09	1231951	80	81	0.005	5			7DN2138
RC97PT09	1231952	81	82	0.005	5			7DN2138
RC97PT10	1231953	0	2	0.110	110			7DN2138
RC97PT10	1231954	2	3	0.230	230			7DN2138
RC97PT10	1231955	3	4	0.130	130			7DN2138
RC97PT10	1231956	4	5	0.005	5			7DN2138
RC97PT10	1231957	5	6	0.005	5			7DN2138
RC97PT10	1231958	6	7	0.005	5			7DN2138
RC97PT10	1231959	7	8	0.005	5			7DN2138
RC97PT10	1231960	8	9	0.010	10			7DN2138
RC97PT10	1231962	9	10	0.180	180			7DN2138

Hole	Samp	Fm	To	Au_ppm	Au_ppb	As	Bi	Batch
RC97PT10	1231963	10	11	0.060	60			7DN2138
RC97PT10	1231964	11	12	0.005	5			7DN2138
RC97PT10	1231965	12	13	0.005	5			7DN2138
RC97PT10	1231966	13	14	0.005	5			7DN2138
RC97PT10	1231967	14	15	0.005	5			7DN2138
RC97PT10	1231968	15	16	0.005	5			7DN2138
RC97PT10	1231969	16	17	0.005	5			7DN2138
RC97PT10	1231970	17	18	0.005	5			7DN2138
RC97PT10	1231971	18	19	0.005	5			7DN2138
RC97PT10	1231972	19	20	0.005	5			7DN2138
RC97PT10	1231973	20	21	0.005	5			7DN2138
RC97PT10	1231974	21	22	0.005	5			7DN2138
RC97PT10	1231975	22	23	0.005	5			7DN2138
RC97PT10	1231976	23	24	0.005	5			7DN2138
RC97PT10	1231977	24	25	0.005	5			7DN2138
RC97PT10	1231978	25	26	0.005	5			7DN2138
RC97PT10	1231979	26	27	0.005	5			7DN2138
RC97PT10	1231980	27	28	0.020	20			7DN2138
RC97PT10	1231981	28	29	0.005	5			7DN2138
RC97PT10	1231982	29	30	0.005	5			7DN2138
RC97PT10	1231983	30	31	0.005	5			7DN2138
RC97PT10	1231984	31	32	0.005	5			7DN2138
RC97PT10	1231985	32	33	0.005	5			7DN2138
RC97PT10	1231986	33	34	0.005	5			7DN2138
RC97PT10	1231987	34	35	0.005	5			7DN2138
RC97PT10	1231988	35	36	0.005	5			7DN2138
RC97PT10	1231989	36	37	0.005	5			7DN2138
RC97PT10	1231990	37	38	0.005	5			7DN2138
RC97PT10	1231992	38	39	0.005	5			7DN2138
RC97PT10	1231993	39	40	0.005	5			7DN2138
RC97PT10	1231994	40	41	0.005	5			7DN2138
RC97PT10	1231995	41	42	0.005	5			7DN2138

Hole	Samp	Fm	To	Au_ppm	Au_ppb	As	Bi	Batch
RC97PT10	1231996	42	44	0.005	5			7DN2138
RC97PT10	1231997	44	45	0.005	5			7DN2138
RC97PT10	1231998	45	46	0.005	5			7DN2138
RC97PT10	1231999	46	47	0.005	5			7DN2138
RC97PT10	1231991	47	48	0.005	5			7DN2138
RC97PT10	1232000	47	48	0.005	5			7DN2138
RC97PT10	1232001	48	49	0.005	5			7DN2138
RC97PT10	1232002	49	50	0.005	5			7DN2138
RC97PT10	1232003	50	51	0.060	60			7DN2138
RC97PT10	1232004	51	52	0.020	20			7DN2138
RC97PT10	1232005	52	53	0.070	70			7DN2138
RC97PT10	1232006	53	54	0.020	20			7DN2138
RC97PT10	1232007	54	55	0.020	20			7DN2138
RC97PT10	1232008	55	56	0.005	5			7DN2138
RC97PT10	1232009	56	57	0.005	5			7DN2138
RC97PT10	1232010	57	58	0.005	5			7DN2138
RC97PT10	1232011	58	59	0.005	5			7DN2138
RC97PT10	1232012	59	60	0.300	300			7DN2138
RC97PT10	1232013	60	61	0.160	160			7DN2138
RC97PT10	1232014	61	62	1.555	1555			7DN2138
RC97PT10	1232015	62	63	0.130	130			7DN2138
RC97PT10	1232016	63	64	0.005	5			7DN2138
RC97PT10	1232017	64	65	0.005	5			7DN2138
RC97PT10	1232018	65	66	0.005	5			7DN2138
RC97PT10	1232019	66	67	0.005	5			7DN2138
RC97PT10	1232020	67	68	0.005	5			7DN2138
RC97PT10	1232021	68	69	0.005	5			7DN2138
RC97PT10	1232022	69	70	0.005	5			7DN2138
RC97PT10	1232023	70	71	0.005	5			7DN2138
RC97PT10	1232024	71	72	0.005	5			7DN2138
RC97PT10	1232025	72	73	0.005	5			7DN2138
RC97PT10	1232026	73	74	0.005	5			7DN2138

Hole	Samp	Fm	To	Au_ppm	Au_ppb	As	Bi	Batch
RC97PT10	1232027	74	75	0.005	5			7DN2138
RC97PT10	1232028	75	76	0.005	5			7DN2138
RC97PT10	1232029	76	77	0.005	5			7DN2138
RC97PT10	1232030	77	78	0.005	5			7DN2138
RC97PT10	1232032	78	79	0.005	5			7DN2138
RC97PT10	1232033	79	80	0.005	5			7DN2138
RC97PT10	1232034	80	81	0.005	5			7DN2138
RC97PT10	1232035	81	82	0.005	5			7DN2138
RC97PT10	1232036	82	83	0.005	5			7DN2138
RC97PT10	1232037	83	84	0.005	5			7DN2138
RC97PT10	1232038	84	85	0.005	5			7DN2138
RC97PT10	1232039	85	86	0.005	5			7DN2138
RC97PT10	1232040	86	87	0.080	80			7DN2138
RC97PT10	1232041	87	88	0.005	5			7DN2138
RC97PT10	1232042	88	89	0.005	5			7DN2138
RC97PT10	1232043	89	90	0.005	5			7DN2138
RC97PT10	1232044	90	91	0.005	5			7DN2138
RC97PT10	1232045	91	92	0.005	5			7DN2138
RC97PT10	1232046	92	93	0.005	5			7DN2138
RC97PT10	1232047	93	94	0.005	5			7DN2138
RC97PT10	1232048	94	95	0.005	5			7DN2138
RC97PT10	1232049	95	96	0.005	5			7DN2138
RC97PT10	1232050	96	97	0.005	5			7DN2138
RC97PT10	1232051	97	98	0.005	5			7DN2138
RC97PT10	1232052	98	99	0.005	5			7DN2138
RC97PT10	1232053	99	100	0.005	5			7DN2138
RC97PT11	1232054	0	1	0.230	230			7DN2202
RC97PT11	1232055	1	2	0.305	305			7DN2202
RC97PT11	1232056	2	3	0.240	240			7DN2202
RC97PT11	1232057	3	4	0.150	150			7DN2202
RC97PT11	1232058	4	5	0.040	40			7DN2202
RC97PT11	1232059	5	6	0.005	5			7DN2202

Hole	Samp	Fm	To	Au_ppm	Au_ppb	As	Bi	Batch
RC97PT11	1232060	6	7	0.005	5			7DN2202
RC97PT11	1232062	7	8	0.005	5			7DN2202
RC97PT11	1232063	8	9	0.005	5			7DN2202
RC97PT11	1232064	9	10	0.005	5			7DN2202
RC97PT11	1232065	10	11	0.005	5			7DN2202
RC97PT11	1232066	11	12	0.005	5			7DN2202
RC97PT11	1232067	12	13	0.005	5			7DN2202
RC97PT11	1232068	13	14	0.005	5			7DN2202
RC97PT11	1232069	14	15	0.005	5			7DN2202
RC97PT11	1232070	15	16	0.005	5			7DN2202
RC97PT11	1232071	16	17	0.005	5			7DN2202
RC97PT11	1232072	17	18	0.013	13			7DN2202
RC97PT11	1232073	18	19	0.005	5			7DN2202
RC97PT11	1232074	19	20	0.005	5			7DN2202
RC97PT11	1232075	20	21	0.070	70			7DN2202
RC97PT11	1232076	21	22	0.050	50			7DN2202
RC97PT11	1232077	22	23	0.030	30			7DN2202
RC97PT11	1232078	23	24	0.005	5			7DN2202
RC97PT11	1232079	24	25	0.005	5			7DN2202
RC97PT11	1232080	25	26	0.005	5			7DN2202
RC97PT11	1232081	26	27	0.005	5			7DN2202
RC97PT11	1232082	27	28	0.007	7			7DN2202
RC97PT11	1232083	28	29	0.005	5			7DN2202
RC97PT11	1232084	29	30	0.005	5			7DN2202
RC97PT11	1232085	30	31	0.005	5			7DN2202
RC97PT11	1232086	31	32	0.005	5			7DN2202
RC97PT11	1232087	32	33	0.030	30			7DN2202
RC97PT11	1232088	33	34	0.070	70			7DN2202
RC97PT11	1232089	34	35	0.050	50			7DN2202
RC97PT11	1232090	35	36	0.110	110			7DN2202
RC97PT11	1232092	36	37	0.203	203			7DN2202
RC97PT11	1232093	37	38	0.005	5			7DN2202

Hole	Samp	Fm	To	Au_ppm	Au_ppb	As	Bi	Batch
RC97PT11	1232094	38	39	0.005	5			7DN2202
RC97PT11	1232095	39	40	0.005	5			7DN2202
RC97PT11	1232096	40	41	0.005	5			7DN2202
RC97PT11	1232097	41	42	0.005	5			7DN2202
RC97PT11	1232098	42	43	0.005	5			7DN2202
RC97PT11	1232099	43	44	0.005	5			7DN2202
RC97PT11	1232100	44	45	0.005	5			7DN2202
RC97PT11	1232101	45	46	0.005	5			7DN2202
RC97PT11	1232102	46	47	0.005	5			7DN2202
RC97PT11	1232103	47	48	0.005	5			7DN2202
RC97PT11	1232104	48	49	0.005	5			7DN2202
RC97PT11	1232105	49	50	0.005	5			7DN2202
RC97PT11	1232106	50	51	0.005	5			7DN2202
RC97PT11	1232107	51	52	0.005	5			7DN2202
RC97PT11	1232108	52	53	0.005	5			7DN2202
RC97PT11	1232091	53	54	0.060	60			7DN2202
RC97PT11	1232109	53	54	0.005	5			7DN2202
RC97PT11	1232110	54	55	0.200	200			7DN2202
RC97PT11	1232111	55	56	0.005	5			7DN2202
RC97PT11	1232112	56	57	0.005	5			7DN2202
RC97PT11	1232113	57	58	0.005	5			7DN2202
RC97PT11	1232114	58	59	0.005	5			7DN2202
RC97PT11	1232115	59	60	0.005	5			7DN2202
RC97PT11	1232116	60	61	0.005	5			7DN2202
RC97PT11	1232117	61	62	0.300	300			7DN2202
RC97PT11	1232118	62	63	0.005	5			7DN2202
RC97PT11	1232119	63	64	0.005	5			7DN2202
RC97PT11	1232120	64	65	0.005	5			7DN2202
RC97PT11	1232121	65	66	0.005	5			7DN2202
RC97PT11	1232122	66	67	0.005	5			7DN2202
RC97PT11	1232123	67	68	0.005	5			7DN2202
RC97PT11	1232124	68	69	0.005	5			7DN2202

Hole	Samp	Fm	To	Au_ppm	Au_ppb	As	Bi	Batch
RC97PT11	1232125	69	70	0.005	5			7DN2202
RC97PT11	1232126	70	71	0.005	5			7DN2202
RC97PT11	1232127	71	72	0.005	5			7DN2202
RC97PT11	1232128	72	73	0.005	5			7DN2202
RC97PT11	1232129	73	74	0.005	5			7DN2202
RC97PT11	1232130	74	75	0.005	5			7DN2202
RC97PT11	1232132	75	76	0.005	5			7DN2202
RC97PT11	1232133	76	77	0.005	5			7DN2202
RC97PT11	1232134	77	79	0.005	5			7DN2202
RC97PT11	1232135	79	80	0.005	5			7DN2202
RC97PT11	1232136	80	81	0.005	5			7DN2202
RC97PT11	1232137	81	82	0.005	5			7DN2202
RC97PT11	1232138	82	83	0.060	60			7DN2202
RC97PT11	1232139	83	84	0.005	5			7DN2202
RC97PT11	1232140	84	85	0.005	5			7DN2202
RC97PT11	1232141	85	86	0.030	30			7DN2202
RC97PT11	1232142	86	87	0.005	5			7DN2202
RC97PT11	1232143	87	88	0.020	20			7DN2202
RC97PT11	1232144	88	89	0.565	565			7DN2202
RC97PT11	1232145	89	90	0.080	80			7DN2202
RC97PT11	1232146	90	91	1.110	1110			7DN2202
RC97PT11	1232147	91	92	0.430	430			7DN2202
RC97PT11	1232148	92	93	0.155	155			7DN2202
RC97PT11	1232149	93	94	0.005	5			7DN2202
RC97PT11	1232150	94	95	0.190	190			7DN2202
RC97PT11	1232151	95	96	0.005	5			7DN2202
RC97PT11	1232152	96	97	0.005	5			7DN2202
RC97PT11	1232153	97	98	0.005	5			7DN2202
RC97PT11	1232154	98	99	0.005	5			7DN2202
RC97PT11	1232155	99	100	0.013	13			7DN2202
RC97PT11	1232156	100	101	0.005	5			7DN2202
RC97PT11	1232157	101	102	0.005	5			7DN2202

Hole	Samp	Fm	To	Au_ppm	Au_ppb	As	Bi	Batch
RC97PT11	1232158	102	103	0.005	5			7DN2202
RC97PT11	1232159	103	104	0.005	5			7DN2202
RC97PT11	1232160	104	105	0.005	5			7DN2202
RC97PT11	1232162	105	106	0.005	5			7DN2202
RC97PT11	1232163	106	107	0.005	5			7DN2202
RC97PT11	1232164	107	108	0.013	13			7DN2202
RC97PT11	1232165	108	109	0.005	5			7DN2202
RC97PT11	1232166	109	110	0.005	5			7DN2202
RC97PT11	1232167	110	111	0.005	5			7DN2202
RC97PT11	1232168	111	112	0.005	5			7DN2202
RC97PT12	1232169	0	1	0.005	5			7DN2202
RC97PT12	1232170	1	2	0.005	5			7DN2202
RC97PT12	1232171	2	3	0.005	5			7DN2202
RC97PT12	1232172	3	4	0.005	5			7DN2202
RC97PT12	1232173	4	5	0.005	5			7DN2202
RC97PT12	1232174	5	6	0.005	5			7DN2202
RC97PT12	1232175	6	7	0.005	5			7DN2202
RC97PT12	1232176	7	8	0.005	5			7DN2202
RC97PT12	1232177	8	9	0.005	5			7DN2202
RC97PT12	1232178	9	10	0.005	5			7DN2202
RC97PT12	1232179	10	11	0.005	5			7DN2202
RC97PT12	1232180	11	12	0.005	5			7DN2202
RC97PT12	1232181	12	13	0.005	5			7DN2202
RC97PT12	1232182	13	14	0.005	5			7DN2202
RC97PT12	1232183	14	15	0.005	5			7DN2202
RC97PT12	1232184	15	16	0.005	5			7DN2202
RC97PT12	1232185	16	17	0.005	5			7DN2202
RC97PT12	1232186	17	18	0.005	5			7DN2202
RC97PT12	1232187	18	19	0.005	5			7DN2202
RC97PT12	1232188	19	20	0.005	5			7DN2202
RC97PT12	1232189	20	21	0.005	5			7DN2202
RC97PT12	1232190	21	22	0.005	5			7DN2202

Hole	Samp	Fm	To	Au_ppm	Au_ppb	As	Bi	Batch
RC97PT12	1232192	22	23	0.005	5			7DN2202
RC97PT12	1232193	23	24	0.020	20			7DN2202
RC97PT12	1232194	24	25	0.005	5			7DN2202
RC97PT12	1232195	25	26	0.050	50			7DN2202
RC97PT12	1232196	26	27	0.190	190			7DN2202
RC97PT12	1232197	27	28	0.005	5			7DN2202
RC97PT12	1232198	28	29	0.005	5			7DN2202
RC97PT12	1232199	29	30	0.005	5			7DN2202
RC97PT12	1232200	30	31	0.005	5			7DN2202
RC97PT12	1232201	31	32	0.005	5			7DN2202
RC97PT12	1232202	32	33	0.005	5			7DN2202
RC97PT12	1232203	33	34	0.005	5			7DN2202
RC97PT12	1232204	34	35	0.005	5			7DN2202
RC97PT12	1232205	35	36	0.005	5			7DN2202
RC97PT12	1232206	36	37	0.005	5			7DN2202
RC97PT12	1232207	37	38	0.005	5			7DN2202
RC97PT12	1232208	38	39	0.005	5			7DN2202
RC97PT12	1232209	39	40	0.005	5			7DN2202
RC97PT12	1232210	40	41	0.005	5			7DN2202
RC97PT12	1232211	41	42	0.005	5			7DN2202
RC97PT12	1232212	42	43	0.005	5			7DN2202
RC97PT12	1232213	43	44	0.005	5			7DN2202
RC97PT12	1232214	44	45	0.005	5			7DN2202
RC97PT12	1232215	45	46	0.005	5			7DN2202
RC97PT12	1232216	46	47	0.005	5			7DN2202
RC97PT12	1232217	47	48	0.005	5			7DN2202
RC97PT12	1232218	48	49	0.005	5			7DN2202
RC97PT12	1232219	49	50	0.005	5			7DN2202
RC97PT12	1232220	50	51	0.005	5			7DN2202
RC97PT12	1232221	51	52	0.020	20			7DN2202
RC97PT12	1232222	52	53	0.007	7			7DN2202
RC97PT12	1232223	53	54	0.005	5			7DN2202

Hole	Samp	Fm	To	Au_ppm	Au_ppb	As	Bi	Batch
RC97PT12	1232224	54	55	0.005	5			7DN2202
RC97PT12	1232225	55	56	0.005	5			7DN2202
RC97PT12	1232226	56	57	0.005	5			7DN2202
RC97PT12	1232227	57	58	0.005	5			7DN2202
RC97PT12	1232228	58	59	0.005	5			7DN2202
RC97PT12	1232229	59	60	0.005	5			7DN2202
RC97PT12	1232230	60	61	0.005	5			7DN2202
RC97PT12	1232232	61	62	0.380	380			7DN2202
RC97PT12	1232233	62	63	0.005	5			7DN2202
RC97PT12	1232234	63	64	0.005	5			7DN2202
RC97PT12	1232235	64	65	0.005	5			7DN2202
RC97PT12	1232236	65	66	0.005	5			7DN2202
RC97PT12	1232237	66	67	0.005	5			7DN2202
RC97PT12	1232238	67	68	0.005	5			7DN2202
RC97PT12	1232239	68	69	0.005	5			7DN2202
RC97PT12	1232240	69	70	0.005	5			7DN2202
RC97PT12	1232241	70	71	0.005	5			7DN2202
RC97PT12	1232242	71	72	0.005	5			7DN2202
RC97PT12	1232243	72	73	0.005	5			7DN2202
RC97PT12	1232244	73	74	0.005	5			7DN2202
RC97PT12	1232245	74	75	0.005	5			7DN2202
RC97PT12	1232246	75	76	0.005	5			7DN2202
RC97PT12	1232247	76	77	0.005	5			7DN2202
RC97PT12	1232248	77	78	0.005	5			7DN2202
RC97PT12	1232249	78	79	0.005	5			7DN2202
RC97PT12	1232250	79	80	0.005	5			7DN2202
RC97PT12	1232251	80	81	0.005	5			7DN2202
RC97PT12	1232252	81	82	0.005	5			7DN2202
RC97PT12	1232253	82	83	0.005	5			7DN2202
RC97PT12	1232254	83	84	0.005	5			7DN2202
RC97PT12	1232255	84	85	0.005	5			7DN2202
RC97PT12	1232256	85	86	0.085	85			7DN2202

Hole	Samp	Fm	To	Au_ppm	Au_ppb	As	Bi	Batch
RC97PT12	1232257	86	87	0.005	5			7DN2202
RC97PT12	1232258	87	88	0.005	5			7DN2202
RC97PT12	1232259	88	89	0.005	5			7DN2202
RC97PT12	1232260	89	90	0.005	5			7DN2202
RC97PT12	1232262	90	91	0.005	5			7DN2202
RC97PT12	1232261	91	92	0.005	5			7DN2202
RC97PT12	1232263	91	92	0.005	5			7DN2202
RC97PT12	1232264	92	93	0.005	5			7DN2202
RC97PT12	1232265	93	94	0.005	5			7DN2202
RC97PT12	1232266	94	95	0.005	5			7DN2202
RC97PT12	1232267	95	96	0.005	5			7DN2202
RC97PT12	1232268	96	97	0.005	5			7DN2202
RC97PT12	1232269	97	98	0.005	5			7DN2202
RC97PT12	1232270	98	99	0.005	5			7DN2202
RC97PT12	1232271	99	100	0.005	5			7DN2202
RC97PT12	1232272	100	101	0.005	5			7DN2202
RC97PT12	1232273	101	102	0.005	5			7DN2202
RC97PT12	1232274	102	103	0.005	5			7DN2202
RC97PT12	1232275	103	104	0.005	5			7DN2202
RC97PT12	1232276	104	105	0.005	5			7DN2202
RC97PT12	1232277	105	106	0.005	5			7DN2202
RC97PT13	1232278	0	1	0.020	20			7DN2202
RC97PT13	1232279	1	2	0.005	5			7DN2202
RC97PT13	1232280	2	3	0.005	5			7DN2202
RC97PT13	1232281	3	4	0.005	5			7DN2202
RC97PT13	1232282	4	5	0.005	5			7DN2202
RC97PT13	1232283	5	6	0.005	5			7DN2202
RC97PT13	1232284	6	7	0.005	5			7DN2202
RC97PT13	1232285	7	8	0.005	5			7DN2202
RC97PT13	1232286	8	9	0.005	5			7DN2202
RC97PT13	1232287	9	10	0.005	5			7DN2202
RC97PT13	1232288	10	11	0.005	5			7DN2202

Hole	Samp	Fm	To	Au_ppm	Au_ppb	As	Bi	Batch
RC97PT13	1232289	11	12	0.005	5			7DN2202
RC97PT13	1232290	12	13	0.005	5			7DN2202
RC97PT13	1232292	13	14	0.005	5			7DN2202
RC97PT13	1232293	14	15	0.005	5			7DN2202
RC97PT13	1232294	15	16	0.005	5			7DN2202
RC97PT13	1232295	16	17	0.005	5			7DN2202
RC97PT13	1232296	17	18	0.005	5			7DN2202
RC97PT13	1232297	18	19	0.005	5			7DN2202
RC97PT13	1232298	19	20	0.005	5			7DN2202
RC97PT13	1232299	20	21	0.005	5			7DN2202
RC97PT13	1232300	21	22	0.005	5			7DN2202
RC97PT13	1232301	22	23	0.005	5			7DN2202
RC97PT13	1232302	23	24	0.005	5			7DN2202
RC97PT13	1232303	24	25	0.005	5			7DN2202
RC97PT13	1232304	25	26	0.005	5			7DN2202
RC97PT13	1232305	26	27	0.005	5			7DN2202
RC97PT13	1232306	27	28	0.005	5			7DN2202
RC97PT13	1232307	28	29	0.005	5			7DN2202
RC97PT13	1232308	29	30	0.005	5			7DN2202
RC97PT13	1232309	30	31	0.005	5			7DN2202
RC97PT13	1232310	31	32	0.005	5			7DN2202
RC97PT13	1232311	32	33	0.005	5			7DN2202
RC97PT13	1232312	33	34	0.005	5			7DN2202
RC97PT13	1232313	34	35	0.005	5			7DN2202
RC97PT13	1232314	35	36	0.005	5			7DN2202
RC97PT13	1232315	36	37	0.005	5			7DN2202
RC97PT13	1232316	37	38	0.005	5			7DN2202
RC97PT13	1232317	38	39	0.005	5			7DN2202
RC97PT13	1232318	39	40	0.005	5			7DN2202
RC97PT13	1232319	40	41	0.005	5			7DN2202
RC97PT13	1232320	41	42	0.005	5			7DN2202
RC97PT13	1232321	42	43	0.005	5			7DN2202

Hole	Samp	Fm	To	Au_ppm	Au_ppb	As	Bi	Batch
RC97PT13	1232322	43	44	0.005	5			7DN2202
RC97PT13	1232323	44	45	0.005	5			7DN2202
RC97PT13	1232324	45	46	0.005	5			7DN2202
RC97PT13	1232325	46	47	0.005	5			7DN2202
RC97PT13	1232361	46	47	0.005	5			7DN2202
RC97PT13	1232326	47	48	0.005	5			7DN2202
RC97PT13	1232327	48	49	0.005	5			7DN2202
RC97PT13	1232328	49	50	0.005	5			7DN2202
RC97PT13	1232329	50	51	0.005	5			7DN2202
RC97PT13	1232330	51	52	0.005	5			7DN2202
RC97PT13	1232332	52	53	0.005	5			7DN2202
RC97PT13	1232333	53	54	0.005	5			7DN2202
RC97PT13	1232334	54	55	0.005	5			7DN2202
RC97PT13	1232335	55	56	0.005	5			7DN2202
RC97PT13	1232336	56	57	0.005	5			7DN2202
RC97PT13	1232337	57	58	0.085	85			7DN2202
RC97PT13	1232338	58	59	0.005	5			7DN2202
RC97PT13	1232339	59	60	0.005	5			7DN2202
RC97PT13	1232340	60	61	0.005	5			7DN2202
RC97PT13	1232341	61	62	0.005	5			7DN2202
RC97PT13	1232342	62	63	0.005	5			7DN2202
RC97PT13	1232343	63	64	0.005	5			7DN2202
RC97PT13	1232344	64	65	0.005	5			7DN2202
RC97PT13	1232345	65	66	0.005	5			7DN2202
RC97PT13	1232346	66	67	0.005	5			7DN2202
RC97PT13	1232347	67	68	0.030	30			7DN2202
RC97PT13	1232348	68	69	0.040	40			7DN2202
RC97PT13	1232349	69	70	0.040	40			7DN2202
RC97PT13	1232350	70	71	0.030	30			7DN2202
RC97PT13	1232351	71	72	0.030	30			7DN2202
RC97PT13	1232352	72	73	0.030	30			7DN2202
RC97PT13	1232353	73	74	0.005	5			7DN2202

Hole	Samp	Fm	To	Au_ppm	Au_ppb	As	Bi	Batch
RC97PT13	1232354	74	75	0.005	5			7DN2202
RC97PT13	1232355	75	76	0.040	40			7DN2202
RC97PT13	1232356	76	77	0.030	30			7DN2202
RC97PT13	1232357	77	78	0.005	5			7DN2202
RC97PT13	1232358	78	79	0.005	5			7DN2202
RC97PT13	1232359	79	80	0.005	5			7DN2202
RC97PT13	1232360	80	81	0.005	5			7DN2202
RC97PT13	1232362	81	82	0.005	5			7DN2202
RC97PT13	1232363	82	83	0.005	5			7DN2202
RC97PT13	1232364	83	84	0.005	5			7DN2202
RC97PT13	1232365	84	85	0.005	5			7DN2202
RC97PT13	1232366	85	86	0.005	5			7DN2202
RC97PT13	1232367	86	87	0.005	5			7DN2202
RC97PT13	1232368	87	88	0.005	5			7DN2202
RC97PT13	1232369	88	89	0.005	5			7DN2202
RC97PT13	1232370	89	90	0.005	5			7DN2202
RC97PT13	1232371	90	91	0.005	5			7DN2202
RC97PT13	1232372	91	92	0.005	5			7DN2202
RC97PT13	1232373	92	93	0.005	5			7DN2202
RC97PT13	1232374	93	94	0.005	5			7DN2202
RC97PT13	1232375	94	95	0.005	5			7DN2202
RC97PT13	1232376	95	96	0.005	5			7DN2202
RC97PT13	1232377	96	97	0.005	5			7DN2202
RC97PT13	1232378	97	98	0.005	5			7DN2202
RC97PT13	1232379	98	99	0.005	5			7DN2202
RC97PT13	1232380	99	100	0.005	5			7DN2202
RC97PT14	1232381	0	1	0.005	5			7DN2202
RC97PT14	1232382	1	2	0.005	5			7DN2202
RC97PT14	1232383	2	3	0.005	5			7DN2202
RC97PT14	1232384	3	4	0.005	5			7DN2202
RC97PT14	1232385	4	5	0.020	20			7DN2202
RC97PT14	1232386	5	6	0.005	5			7DN2202

Hole	Samp	Fm	To	Au_ppm	Au_ppb	As	Bi	Batch
RC97PT14	1232387	6	7	0.005	5			7DN2202
RC97PT14	1232388	7	8	0.005	5			7DN2202
RC97PT14	1232389	8	9	0.005	5			7DN2202
RC97PT14	1232390	9	10	0.005	5			7DN2202
RC97PT14	1232392	10	11	0.005	5			7DN2202
RC97PT14	1232393	11	12	0.005	5			7DN2202
RC97PT14	1232394	12	13	0.005	5			7DN2202
RC97PT14	1232395	13	14	0.005	5			7DN2202
RC97PT14	1232396	14	15	0.005	5			7DN2202
RC97PT14	1232397	15	16	0.005	5			7DN2202
RC97PT14	1232398	16	17	0.005	5			7DN2202
RC97PT14	1232399	17	18	0.005	5			7DN2202
RC97PT14	1232400	18	19	0.005	5			7DN2202
RC97PT14	1232401	19	20	0.023	23			7DN2202
RC97PT14	1232402	20	21	0.005	5			7DN2202
RC97PT14	1232403	21	22	0.005	5			7DN2202
RC97PT14	1232404	22	23	0.005	5			7DN2202
RC97PT14	1232405	23	24	0.005	5			7DN2202
RC97PT14	1232406	24	25	0.005	5			7DN2202
RC97PT14	1232407	25	26	0.005	5			7DN2202
RC97PT14	1232408	26	27	0.005	5			7DN2202
RC97PT14	1232409	27	28	0.005	5			7DN2202
RC97PT14	1232410	28	29	0.005	5			7DN2202
RC97PT14	1232411	29	30	0.005	5			7DN2202
RC97PT14	1232412	30	31	0.005	5			7DN2202
RC97PT14	1232413	31	32	0.005	5			7DN2202
RC97PT14	1232414	32	33	0.005	5			7DN2202
RC97PT14	1232415	33	34	0.005	5			7DN2202
RC97PT14	1232416	34	35	0.005	5			7DN2202
RC97PT14	1232417	35	36	0.005	5			7DN2202
RC97PT14	1232418	36	37	0.005	5			7DN2202
RC97PT14	1232419	37	38	0.005	5			7DN2202

Hole	Samp	Fm	To	Au_ppm	Au_ppb	As	Bi	Batch
RC97PT14	1232420	38	39	0.005	5			7DN2202
RC97PT14	1232421	39	40	0.005	5			7DN2202
RC97PT14	1232422	40	41	0.005	5			7DN2202
RC97PT14	1232423	41	42	0.005	5			7DN2202
RC97PT14	1232424	42	43	0.005	5			7DN2202
RC97PT14	1232425	43	44	0.005	5			7DN2202
RC97PT14	1232426	44	45	0.005	5			7DN2202
RC97PT14	1232427	45	46	0.005	5			7DN2202
RC97PT14	1232428	46	47	0.005	5			7DN2202
RC97PT14	1232429	47	48	0.005	5			7DN2202
RC97PT14	1232430	48	49	0.005	5			7DN2202
RC97PT14	1232432	49	50	0.005	5			7DN2202
RC97PT14	1232433	50	51	0.040	40			7DN2202
RC97PT14	1232434	51	52	0.005	5			7DN2202
RC97PT14	1232435	52	53	0.005	5			7DN2202
RC97PT14	1232436	53	54	0.005	5			7DN2202
RC97PT14	1232437	54	55	0.005	5			7DN2202
RC97PT14	1232438	55	56	0.005	5			7DN2202
RC97PT14	1232439	56	57	0.005	5			7DN2202
RC97PT14	1232440	57	58	0.005	5			7DN2202
RC97PT14	1232441	58	59	0.005	5			7DN2202
RC97PT14	1232461	58	59	0.005	5			7DN2202
RC97PT14	1232442	59	60	0.005	5			7DN2202
RC97PT14	1232443	60	61	0.005	5			7DN2202
RC97PT14	1232444	61	62	0.005	5			7DN2202
RC97PT14	1232445	62	63	0.005	5			7DN2202
RC97PT14	1232446	63	64	0.005	5			7DN2202
RC97PT14	1232447	64	65	0.005	5			7DN2202
RC97PT14	1232448	65	66	0.005	5			7DN2202
RC97PT14	1232449	66	67	0.005	5			7DN2202
RC97PT14	1232450	67	68	0.005	5			7DN2202
RC97PT14	1232451	68	69	0.005	5			7DN2202

Hole	Samp	Fm	To	Au_ppm	Au_ppb	As	Bi	Batch
RC97PT14	1232452	69	70	0.005	5			7DN2202
RC97PT14	1232453	70	71	0.005	5			7DN2202
RC97PT14	1232454	71	72	0.005	5			7DN2202
RC97PT14	1232455	72	73	0.005	5			7DN2202
RC97PT14	1232456	73	74	0.005	5			7DN2202
RC97PT14	1232457	74	75	0.005	5			7DN2202
RC97PT14	1232458	75	76	0.005	5			7DN2202
RC97PT14	1232459	76	77	0.005	5			7DN2202
RC97PT14	1232460	77	78	0.005	5			7DN2202
RC97PT14	1232462	78	79	0.005	5			7DN2202
RC97PT14	1232463	79	80	0.170	170			7DN2202
RC97PT14	1232464	80	81	0.010	10			7DN2202
RC97PT14	1232465	81	82	0.135	135			7DN2202
RC97PT14	1232466	82	83	0.005	5			7DN2202
RC97PT14	1232467	83	84	0.005	5			7DN2202
RC97PT14	1232468	84	85	0.005	5			7DN2202
RC97PT14	1232469	85	86	0.670	670			7DN2202
RC97PT14	1232470	86	87	0.265	265			7DN2202
RC97PT14	1232471	87	88	0.530	530			7DN2202
RC97PT14	1232472	88	89	0.005	5			7DN2202
RC97PT14	1232473	89	90	0.205	205			7DN2202
RC97PT14	1232474	90	91	0.005	5			7DN2202
RC97PT14	1232475	91	92	0.005	5			7DN2202
RC97PT14	1232476	92	93	0.005	5			7DN2202
RC97PT14	1232477	93	94	0.005	5			7DN2202
RC97PT14	1232478	94	95	0.005	5			7DN2202
RC97PT14	1232479	95	96	0.005	5			7DN2202
RC97PT14	1232480	96	97	0.005	5			7DN2202
RC97PT14	1232481	97	98	0.005	5			7DN2202
RC97PT14	1232482	98	99	0.005	5			7DN2202
RC97PT14	1232483	99	100	0.005	5			7DN2202
RC97PT15	1232484	0	1	0.020	20			7DN2203

Hole	Samp	Fm	To	Au_ppm	Au_ppb	As	Bi	Batch
RC97PT15	1232485	1	2	0.010	10			7DN2203
RC97PT15	1232486	2	3	0.005	5			7DN2203
RC97PT15	1232487	3	4	0.005	5			7DN2203
RC97PT15	1232488	4	5	0.010	10			7DN2203
RC97PT15	1232489	5	6	0.010	10			7DN2203
RC97PT15	1232490	6	7	0.005	5			7DN2203
RC97PT15	1232492	7	8	0.020	20			7DN2203
RC97PT15	1232493	8	9	0.005	5			7DN2203
RC97PT15	1232494	9	10	0.040	40			7DN2203
RC97PT15	1232495	10	11	0.040	40			7DN2203
RC97PT15	1232496	11	12	0.080	80			7DN2203
RC97PT15	1232497	12	13	0.080	80			7DN2203
RC97PT15	1232498	13	14	0.010	10			7DN2203
RC97PT15	1232499	14	15	0.005	5			7DN2203
RC97PT15	1232500	15	16	0.005	5			7DN2203
RC97PT15	1232501	16	17	0.005	5			7DN2203
RC97PT15	1232502	17	18	0.005	5			7DN2203
RC97PT15	1232503	18	19	0.005	5			7DN2203
RC97PT15	1232504	19	20	0.005	5			7DN2203
RC97PT15	1232505	20	21	0.005	5			7DN2203
RC97PT15	1232506	21	22	0.005	5			7DN2203
RC97PT15	1232507	22	23	0.005	5			7DN2203
RC97PT15	1232508	23	24	0.005	5			7DN2203
RC97PT15	1232509	24	25	0.005	5			7DN2203
RC97PT15	1232510	25	26	0.005	5			7DN2203
RC97PT15	1232511	26	27	0.005	5			7DN2203
RC97PT15	1232512	27	28	0.010	10			7DN2203
RC97PT15	1232513	28	29	0.005	5			7DN2203
RC97PT15	1232514	29	30	0.005	5			7DN2203
RC97PT15	1232515	30	31	0.005	5			7DN2203
RC97PT15	1232516	31	32	0.005	5			7DN2203
RC97PT15	1232517	32	33	0.005	5			7DN2203

Hole	Samp	Fm	To	Au_ppm	Au_ppb	As	Bi	Batch
RC97PT15	1232518	33	34	0.005	5			7DN2203
RC97PT15	1232519	34	35	0.005	5			7DN2203
RC97PT15	1232520	35	36	0.005	5			7DN2203
RC97PT15	1232521	36	37	0.005	5			7DN2203
RC97PT15	1232522	37	38	0.005	5			7DN2203
RC97PT15	1232523	38	39	0.005	5			7DN2203
RC97PT15	1232524	39	40	0.005	5			7DN2203
RC97PT15	1232525	40	41	0.005	5			7DN2203
RC97PT15	1232526	41	42	0.005	5			7DN2203
RC97PT15	1232527	42	43	0.027	27			7DN2203
RC97PT15	1232528	43	44	0.005	5			7DN2203
RC97PT15	1232529	44	45	0.005	5			7DN2203
RC97PT15	1232530	45	46	0.005	5			7DN2203
RC97PT15	1232532	46	47	0.005	5			7DN2203
RC97PT15	1232533	47	48	0.010	10			7DN2203
RC97PT15	1232534	48	49	0.005	5			7DN2203
RC97PT15	1232535	49	50	0.005	5			7DN2203
RC97PT15	1232536	50	51	0.005	5			7DN2203
RC97PT15	1232537	51	52	0.005	5			7DN2203
RC97PT15	1232538	52	53	0.005	5			7DN2203
RC97PT15	1232539	53	54	0.005	5			7DN2203
RC97PT15	1232540	54	55	0.005	5			7DN2203
RC97PT15	1232541	55	56	0.010	10			7DN2203
RC97PT15	1232542	56	57	0.005	5			7DN2203
RC97PT15	1232543	57	58	0.005	5			7DN2203
RC97PT15	1232544	58	59	0.005	5			7DN2203
RC97PT15	1232545	59	60	0.005	5			7DN2203
RC97PT15	1232546	60	61	0.005	5			7DN2203
RC97PT15	1232547	61	62	0.005	5			7DN2203
RC97PT15	1232548	62	63	0.005	5			7DN2203
RC97PT15	1232549	63	64	0.005	5			7DN2203
RC97PT15	1232550	64	65	0.010	10			7DN2203

Hole	Samp	Fm	To	Au_ppm	Au_ppb	As	Bi	Batch
RC97PT15	1232551	65	66	0.010	10			7DN2203
RC97PT15	1232552	66	67	0.007	7			7DN2203
RC97PT15	1232553	67	68	0.005	5			7DN2203
RC97PT15	1232554	68	69	0.005	5			7DN2203
RC97PT15	1232555	69	70	0.005	5			7DN2203
RC97PT15	1232556	70	71	0.005	5			7DN2203
RC97PT15	1232557	71	72	0.005	5			7DN2203
RC97PT15	1232558	72	73	#Error	#Error			7DN2203
RC97PT15	1232559	73	74	0.020	20			7DN2203
RC97PT15	1232560	74	75	0.010	10			7DN2203
RC97PT15	1232562	75	76	0.020	20			7DN2203
RC97PT15	1232563	76	77	0.005	5			7DN2203
RC97PT15	1232564	77	78	0.005	5			7DN2203
RC97PT15	1232565	78	79	0.005	5			7DN2203
RC97PT15	1232566	79	80	0.005	5			7DN2203
RC97PT15	1232567	80	81	0.005	5			7DN2203
RC97PT15	1232561	81	82	0.005	5			7DN2203
RC97PT15	1232568	81	82	0.005	5			7DN2203
RC97PT15	1232569	82	83	0.005	5			7DN2203
RC97PT15	1232570	83	84	0.010	10			7DN2203
RC97PT15	1232571	84	85	0.005	5			7DN2203
RC97PT15	1232572	85	86	0.005	5			7DN2203
RC97PT15	1232573	86	87	0.005	5			7DN2203
RC97PT15	1232574	87	88	0.005	5			7DN2203
RC97PT15	1232575	88	89	0.005	5			7DN2203
RC97PT15	1232576	89	90	0.005	5			7DN2203
RC97PT15	1232577	90	91	0.005	5			7DN2203
RC97PT15	1232578	91	92	0.005	5			7DN2203
RC97PT15	1232579	92	93	0.005	5			7DN2203
RC97PT15	1232580	93	94	0.005	5			7DN2203
RC97PT15	1232581	94	95	0.005	5			7DN2203
RC97PT15	1232582	95	96	0.005	5			7DN2203

Hole	Samp	Fm	To	Au_ppm	Au_ppb	As	Bi	Batch
RC97PT15	1232583	96	97	0.005	5			7DN2203
RC97PT15	1232584	97	98	0.005	5			7DN2203
RC97PT15	1232585	98	99	0.005	5			7DN2203
RC97PT15	1232586	99	100	0.005	5			7DN2203
RC97PT16	1232587	0	1	0.020	20			7DN2237
RC97PT16	1232588	1	2	0.005	5			7DN2237
RC97PT16	1232589	2	3	0.005	5			7DN2237
RC97PT16	1232590	3	4	0.005	5			7DN2237
RC97PT16	1232592	4	5	0.005	5			7DN2237
RC97PT16	1232593	5	6	0.005	5			7DN2237
RC97PT16	1232594	6	7	0.005	5			7DN2237
RC97PT16	1232595	7	8	0.010	10			7DN2237
RC97PT16	1232596	8	9	0.005	5			7DN2237
RC97PT16	1232597	9	10	0.005	5			7DN2237
RC97PT16	1232598	10	11	0.005	5			7DN2237
RC97PT16	1232599	11	12	0.005	5			7DN2237
RC97PT16	1232600	12	13	0.005	5			7DN2237
RC97PT16	1232601	13	14	0.005	5			7DN2237
RC97PT16	1232602	14	15	0.005	5			7DN2237
RC97PT16	1232603	15	16	0.005	5			7DN2237
RC97PT16	1232604	16	17	0.005	5			7DN2237
RC97PT16	1232605	17	18	0.005	5			7DN2237
RC97PT16	1232606	18	19	0.005	5			7DN2237
RC97PT16	1232607	19	20	0.005	5			7DN2237
RC97PT16	1232608	20	21	0.005	5			7DN2237
RC97PT16	1232609	21	22	0.020	20			7DN2237
RC97PT16	1232610	22	23	0.440	440			7DN2237
RC97PT16	1232611	23	24	0.670	670			7DN2237
RC97PT16	1232612	24	25	0.340	340			7DN2237
RC97PT16	1232613	25	26	0.160	160			7DN2237
RC97PT16	1232614	26	27	0.510	510			7DN2237
RC97PT16	1232615	27	28	1.360	1360			7DN2237

Hole	Samp	Fm	To	Au_ppm	Au_ppb	As	Bi	Batch
RC97PT16	1232616	28	29	0.100	100			7DN2237
RC97PT16	1232617	29	30	0.005	5			7DN2237
RC97PT16	1232618	30	31	0.005	5			7DN2237
RC97PT16	1232619	31	32	0.100	100			7DN2237
RC97PT16	1232620	32	33	0.200	200			7DN2237
RC97PT16	1232621	33	34	0.120	120			7DN2237
RC97PT16	1232622	34	35	0.220	220			7DN2237
RC97PT16	1232623	35	36	0.160	160			7DN2237
RC97PT16	1232624	36	37	0.180	180			7DN2237
RC97PT16	1232625	37	38	0.140	140			7DN2237
RC97PT16	1232626	38	39	0.080	80			7DN2237
RC97PT16	1232627	39	40	0.005	5			7DN2237
RC97PT16	1232628	40	41	0.040	40			7DN2237
RC97PT16	1232629	41	42	0.120	120			7DN2237
RC97PT16	1232630	42	43	0.020	20			7DN2237
RC97PT16	1232632	43	44	0.020	20			7DN2237
RC97PT16	1232633	44	45	0.005	5			7DN2237
RC97PT16	1232634	45	46	0.005	5			7DN2237
RC97PT16	1232635	46	47	0.050	50			7DN2237
RC97PT16	1232636	47	48	0.050	50			7DN2237
RC97PT16	1232637	48	49	0.005	5			7DN2237
RC97PT16	1232638	49	50	0.100	100			7DN2237
RC97PT16	1232639	50	51	0.005	5			7DN2237
RC97PT16	1232640	51	52	0.005	5			7DN2237
RC97PT16	1232641	52	53	0.005	5			7DN2237
RC97PT16	1232642	53	54	0.005	5			7DN2237
RC97PT16	1232643	54	55	0.040	40			7DN2237
RC97PT16	1232644	55	56	0.005	5			7DN2237
RC97PT16	1232645	56	57	0.005	5			7DN2237
RC97PT16	1232646	57	58	0.005	5			7DN2237
RC97PT16	1232647	58	59	0.005	5			7DN2237
RC97PT16	1232648	59	60	0.005	5			7DN2237

Hole	Samp	Fm	To	Au_ppm	Au_ppb	As	Bi	Batch
RC97PT16	1232649	60	61	0.020	20			7DN2237
RC97PT16	1232650	61	62	0.020	20			7DN2237
RC97PT16	1232651	62	63	0.020	20			7DN2237
RC97PT16	1232652	63	64	0.005	5			7DN2237
RC97PT16	1232653	64	65	0.005	5			7DN2237
RC97PT16	1232654	65	66	0.005	5			7DN2237
RC97PT16	1232655	66	67	0.005	5			7DN2237
RC97PT16	1232656	67	68	0.005	5			7DN2237
RC97PT16	1232657	68	69	0.005	5			7DN2237
RC97PT16	1232658	69	70	0.005	5			7DN2237
RC97PT16	1232659	70	71	0.005	5			7DN2237
RC97PT16	1232660	71	72	0.020	20			7DN2237
RC97PT16	1232662	72	73	0.020	20			7DN2237
RC97PT16	1232663	73	74	0.020	20			7DN2237
RC97PT16	1232664	74	75	0.005	5			7DN2237
RC97PT16	1232665	75	76	0.005	5			7DN2237
RC97PT16	1232666	76	77	0.005	5			7DN2237
RC97PT16	1232667	77	78	0.005	5			7DN2237
RC97PT16	1232668	78	79	0.005	5			7DN2237
RC97PT16	1232669	79	80	0.005	5			7DN2237
RC97PT16	1232670	80	81	0.007	7			7DN2237
RC97PT16	1232671	81	82	0.010	10			7DN2237
RC97PT16	1232672	82	83	0.005	5			7DN2237
RC97PT16	1232673	83	84	0.007	7			7DN2237
RC97PT16	1232674	84	85	0.005	5			7DN2237
RC97PT16	1232675	85	86	0.005	5			7DN2237
RC97PT16	1232676	86	87	0.005	5			7DN2237
RC97PT16	1232677	87	88	0.010	10			7DN2237
RC97PT16	1232678	88	89	0.005	5			7DN2237
RC97PT16	1232679	89	90	0.005	5			7DN2237
RC97PT16	1232680	90	91	0.005	5			7DN2237
RC97PT16	1232681	91	92	0.005	5			7DN2237

Hole	Samp	Fm	To	Au_ppm	Au_ppb	As	Bi	Batch
RC97PT16	1232682	92	93	0.005	5			7DN2237
RC97PT16	1232683	93	94	0.005	5			7DN2237
RC97PT16	1232684	94	95	0.010	10			7DN2237
RC97PT16	1232685	95	96	0.005	5			7DN2237
RC97PT16	1232686	96	97	0.005	5			7DN2237
RC97PT16	1232687	97	98	0.005	5			7DN2237
RC97PT16	1232688	98	99	0.020	20			7DN2237
RC97PT16	1232689	99	100	0.005	5			7DN2237
RC97PT18	1232793	0	1	0.060	60			7DN2252
RC97PT18	1232794	1	2	0.020	20			7DN2252
RC97PT18	1232795	2	3	0.020	20			7DN2252
RC97PT18	1232796	3	4	0.020	20			7DN2252
RC97PT18	1232797	4	5	0.020	20			7DN2252
RC97PT18	1232798	5	6	0.030	30			7DN2252
RC97PT18	1232799	6	7	0.020	20			7DN2252
RC97PT18	1232800	7	8	0.040	40			7DN2252
RC97PT18	1232801	8	9	0.045	45			7DN2252
RC97PT18	1232802	9	10	0.010	10			7DN2252
RC97PT18	1232803	10	12	0.020	20			7DN2252
RC97PT18	1232804	12	13	0.020	20			7DN2252
RC97PT18	1232805	13	14	0.060	60			7DN2252
RC97PT18	1232806	14	15	0.050	50			7DN2252
RC97PT18	1232807	15	16	0.130	130			7DN2252
RC97PT18	1232808	16	17	0.100	100			7DN2252
RC97PT18	1232809	17	18	0.050	50			7DN2252
RC97PT18	1232810	18	19	0.275	275			7DN2252
RC97PT18	1232811	19	20	0.045	45			7DN2252
RC97PT18	1232812	20	21	0.040	40			7DN2252
RC97PT18	1232813	21	22	0.020	20			7DN2252
RC97PT18	1232814	22	23	0.010	10			7DN2252
RC97PT18	1232815	23	24	0.030	30			7DN2252
RC97PT18	1232816	24	25	0.020	20			7DN2252

Hole	Samp	Fm	To	Au_ppm	Au_ppb	As	Bi	Batch
RC97PT18	1232817	25	26	0.160	160			7DN2252
RC97PT18	1232818	26	27	0.030	30			7DN2252
RC97PT18	1232819	27	28	0.070	70			7DN2252
RC97PT18	1232820	28	29	0.040	40			7DN2252
RC97PT18	1232821	29	30	0.020	20			7DN2252
RC97PT18	1232822	30	31	0.110	110			7DN2252
RC97PT18	1232823	31	32	0.110	110			7DN2252
RC97PT18	1232824	32	33	0.150	150			7DN2252
RC97PT18	1232825	33	34	0.040	40			7DN2252
RC97PT18	1232826	34	35	0.100	100			7DN2252
RC97PT18	1232827	35	36	0.355	355			7DN2252
RC97PT18	1232891	35	36	0.385	385			7DN2252
RC97PT18	1232828	36	37	0.060	60			7DN2252
RC97PT18	1232829	37	38	0.110	110			7DN2252
RC97PT18	1232830	38	39	0.560	560			7DN2252
RC97PT18	1232832	39	40	0.360	360			7DN2252
RC97PT18	1232833	40	41	0.160	160			7DN2252
RC97PT18	1232834	41	42	0.405	405			7DN2252
RC97PT18	1232835	42	43	0.270	270			7DN2252
RC97PT18	1232836	43	44	0.475	475			7DN2252
RC97PT18	1232837	44	45	0.420	420			7DN2252
RC97PT18	1232838	45	46	0.275	275			7DN2252
RC97PT18	1232839	46	47	0.295	295			7DN2252
RC97PT18	1232840	47	48	0.110	110			7DN2252
RC97PT18	1232841	48	49	0.040	40			7DN2252
RC97PT18	1232842	49	50	0.030	30			7DN2252
RC97PT18	1232843	50	51	0.090	90			7DN2252
RC97PT18	1232844	51	52	0.020	20			7DN2252
RC97PT18	1232845	52	53	0.020	20			7DN2252
RC97PT18	1232846	53	54	0.035	35			7DN2252
RC97PT18	1232847	54	55	0.030	30			7DN2252
RC97PT18	1232848	55	56	0.030	30			7DN2252

Hole	Samp	Fm	To	Au_ppm	Au_ppb	As	Bi	Batch
RC97PT18	1232849	56	57	0.030	30			7DN2252
RC97PT18	1232850	57	58	0.030	30			7DN2252
RC97PT18	1232851	58	59	0.053	53			7DN2252
RC97PT18	1232852	59	60	0.030	30			7DN2252
RC97PT18	1232853	60	61	0.020	20			7DN2252
RC97PT18	1232854	61	62	0.040	40			7DN2252
RC97PT18	1232855	62	63	0.030	30			7DN2252
RC97PT18	1232856	63	64	0.060	60			7DN2252
RC97PT18	1232857	64	65	0.030	30			7DN2252
RC97PT18	1232858	65	66	0.030	30			7DN2252
RC97PT18	1232859	66	67	0.020	20			7DN2252
RC97PT18	1232860	67	68	0.020	20			7DN2252
RC97PT18	1232862	68	69	0.030	30			7DN2252
RC97PT18	1232863	69	70	0.020	20			7DN2252
RC97PT18	1232864	70	71	0.010	10			7DN2252
RC97PT18	1232865	71	72	0.030	30			7DN2252
RC97PT18	1232866	72	73	0.020	20			7DN2252
RC97PT18	1232867	73	74	0.020	20			7DN2252
RC97PT18	1232868	74	75	0.020	20			7DN2252
RC97PT18	1232869	75	76	0.020	20			7DN2252
RC97PT18	1232870	76	77	0.020	20			7DN2252
RC97PT18	1232871	77	78	0.020	20			7DN2252
RC97PT18	1232872	78	79	0.030	30			7DN2252
RC97PT18	1232873	79	80	0.100	100			7DN2252
RC97PT18	1232874	80	81	0.020	20			7DN2252
RC97PT18	1232875	81	82	0.005	5			7DN2252
RC97PT18	1232876	82	83	0.015	15			7DN2252
RC97PT18	1232877	83	84	0.005	5			7DN2252
RC97PT18	1232878	84	85	0.010	10			7DN2252
RC97PT18	1232879	85	86	0.020	20			7DN2252
RC97PT18	1232880	86	87	0.020	20			7DN2252
RC97PT18	1232881	87	88	0.010	10			7DN2252

Hole	Samp	Fm	To	Au_ppm	Au_ppb	As	Bi	Batch
RC97PT18	1232882	88	89	0.010	10			7DN2252
RC97PT18	1232883	89	90	0.010	10			7DN2252
RC97PT18	1232884	90	91	0.005	5			7DN2252
RC97PT18	1232885	91	92	0.010	10			7DN2252
RC97PT18	1232886	92	93	0.005	5			7DN2252
RC97PT18	1232887	93	94	0.010	10			7DN2252
RC97PT18	1232888	94	95	0.140	140			7DN2252
RC97PT18	1232889	95	96	0.010	10			7DN2252
RC97PT18	1232890	96	97	0.030	30			7DN2252
RC97PT18	1232892	97	98	0.007	7			7DN2252
RC97PT18	1232893	98	99	0.005	5			7DN2252
RC97PT18	1232894	99	100	0.020	20			7DN2252
RC97PT19	1232895	0	1	0.005	5			7DN2261
RC97PT19	1232896	1	2	0.005	5			7DN2261
RC97PT19	1232897	2	3	0.005	5			7DN2261
RC97PT19	1232898	3	4	0.020	20			7DN2261
RC97PT19	1232899	4	5	0.005	5			7DN2261
RC97PT19	1232900	5	6	0.005	5			7DN2261
RC97PT19	1232901	6	7	0.005	5			7DN2261
RC97PT19	1232902	7	8	0.005	5			7DN2261
RC97PT19	1232903	8	9	0.005	5			7DN2261
RC97PT19	1232904	9	10	0.005	5			7DN2261
RC97PT19	1232905	10	11	0.030	30			7DN2261
RC97PT19	1232906	11	12	0.020	20			7DN2261
RC97PT19	1232907	12	13	0.020	20			7DN2261
RC97PT19	1232908	13	14	0.005	5			7DN2261
RC97PT19	1232909	14	15	0.005	5			7DN2261
RC97PT19	1232910	15	16	0.010	10			7DN2261
RC97PT19	1232911	16	17	0.005	5			7DN2261
RC97PT19	1232912	17	18	0.005	5			7DN2261
RC97PT19	1232913	18	19	0.005	5			7DN2261
RC97PT19	1232914	19	20	0.005	5			7DN2261

Hole	Samp	Fm	To	Au_ppm	Au_ppb	As	Bi	Batch
RC97PT19	1232915	20	21	0.050	50			7DN2261
RC97PT19	1232916	21	22	0.605	605			7DN2261
RC97PT19	1232917	22	23	0.005	5			7DN2261
RC97PT19	1232918	23	24	0.005	5			7DN2261
RC97PT19	1232919	24	25	0.005	5			7DN2261
RC97PT19	1232920	25	26	0.005	5			7DN2261
RC97PT19	1232921	26	27	0.005	5			7DN2261
RC97PT19	1232922	27	28	0.005	5			7DN2261
RC97PT19	1232923	28	29	0.005	5			7DN2261
RC97PT19	1232924	29	30	0.005	5			7DN2261
RC97PT19	1232925	30	31	0.005	5			7DN2261
RC97PT19	1232926	31	32	0.070	70			7DN2261
RC97PT19	1232927	32	33	0.005	5			7DN2261
RC97PT19	1232928	33	34	0.005	5			7DN2261
RC97PT19	1232929	34	35	0.020	20			7DN2261
RC97PT19	1232930	35	36	0.005	5			7DN2261
RC97PT19	1232932	36	37	0.005	5			7DN2261
RC97PT19	1232933	37	38	0.005	5			7DN2261
RC97PT19	1232934	38	39	0.005	5			7DN2261
RC97PT19	1232935	39	40	0.005	5			7DN2261
RC97PT19	1232936	40	41	0.010	10			7DN2261
RC97PT19	1232937	41	42	0.027	27			7DN2261
RC97PT19	1232938	42	43	0.005	5			7DN2261
RC97PT19	1232939	43	44	0.005	5			7DN2261
RC97PT19	1232940	44	45	0.020	20			7DN2261
RC97PT19	1232941	45	46	0.005	5			7DN2261
RC97PT19	1232942	46	47	0.005	5			7DN2261
RC97PT19	1232943	47	48	0.005	5			7DN2261
RC97PT19	1232944	48	49	0.020	20			7DN2261
RC97PT19	1232945	49	50	0.030	30			7DN2261
RC97PT19	1232946	50	51	0.050	50			7DN2261
RC97PT19	1232947	51	52	0.005	5			7DN2261

Hole	Samp	Fm	To	Au_ppm	Au_ppb	As	Bi	Batch
RC97PT19	1232948	52	53	0.010	10			7DN2261
RC97PT19	1232949	53	54	0.030	30			7DN2261
RC97PT19	1232950	54	55	0.005	5			7DN2261
RC97PT19	1232951	55	56	0.010	10			7DN2261
RC97PT19	1232952	56	57	0.005	5			7DN2261
RC97PT19	1232953	57	58	0.005	5			7DN2261
RC97PT19	1232954	58	59	0.040	40			7DN2261
RC97PT19	1232955	59	60	0.040	40			7DN2261
RC97PT19	1232956	60	61	0.160	160			7DN2261
RC97PT19	1232957	61	62	0.050	50			7DN2261
RC97PT19	1232958	62	63	0.005	5			7DN2261
RC97PT19	1232959	63	64	0.005	5			7DN2261
RC97PT19	1232960	64	65	0.005	5			7DN2261
RC97PT19	1232962	65	66	0.030	30			7DN2261
RC97PT19	1232963	66	67	0.140	140			7DN2261
RC97PT19	1232964	67	68	0.050	50			7DN2261
RC97PT19	1232965	68	69	0.020	20			7DN2261
RC97PT19	1232966	69	70	0.150	150			7DN2261
RC97PT19	1232967	70	71	1.625	1625			7DN2261
RC97PT19	1232968	71	72	0.040	40			7DN2261
RC97PT19	1232969	72	73	0.010	10			7DN2261
RC97PT19	1232970	73	74	0.005	5			7DN2261
RC97PT19	1232971	74	75	0.040	40			7DN2261
RC97PT19	1232972	75	76	0.040	40			7DN2261
RC97PT19	1232973	76	77	0.517	517			7DN2261
RC97PT19	1232974	77	78	0.220	220			7DN2261
RC97PT19	1232975	78	79	0.055	55			7DN2261
RC97PT19	1232976	79	80	0.030	30			7DN2261
RC97PT19	1232977	80	81	0.040	40			7DN2261
RC97PT19	1232978	81	82	0.100	100			7DN2261
RC97PT19	1232979	82	83	0.040	40			7DN2261
RC97PT19	1232980	83	84	0.010	10			7DN2261

Hole	Samp	Fm	To	Au_ppm	Au_ppb	As	Bi	Batch
RC97PT19	1232981	84	85	0.070	70			7DN2261
RC97PT19	1232982	85	86	0.020	20			7DN2261
RC97PT19	1232983	86	87	0.005	5			7DN2261
RC97PT19	1232984	87	88	0.070	70			7DN2261
RC97PT19	1232985	88	89	0.110	110			7DN2261
RC97PT19	1232986	89	90	0.030	30			7DN2261
RC97PT19	1232987	90	91	0.040	40			7DN2261
RC97PT19	1232988	91	92	0.040	40			7DN2261
RC97PT19	1232989	92	93	0.020	20			7DN2261
RC97PT19	1232990	93	94	0.020	20			7DN2261
RC97PT19	1232992	94	95	0.050	50			7DN2261
RC97PT19	1232991	95	96	0.005	5			7DN2261
RC97PT19	1232993	95	96	0.070	70			7DN2261
RC97PT19	1232994	96	97	0.020	20			7DN2261
RC97PT19	1232995	97	98	0.010	10			7DN2261
RC97PT19	1232996	98	99	0.010	10			7DN2261
RC97PT19	1232997	99	100	0.010	10			7DN2261
RC97PT19	1232998	100	101	0.005	5			7DN2261
RC97PT19	1232999	101	102	0.020	20			7DN2261
RC97PT19	1233000	102	103	0.005	5			7DN2261
RC97PT19	1233001	103	104	0.005	5			7DN2261
RC97PT19	1233002	104	105	0.010	10			7DN2261
RC97PT19	1233003	105	106	0.010	10			7DN2261

Geology Report

Hole	Fm	To	Maj	Min1	Min2	Alter	Col	Wth	H2O	Ret	Texture	Qtz	BMS	QMS	CHT	SI	GW	SH	Lim	Py	AsPy	Oth Sulph	Per	Oth Min	Per	Comments
C97PT07	0	1	QMS	SH		FEHM	RDBN	SW	D	100	SC	0.1		90					80					SH	10	OPEN HOLE
C97PT07	1	2	QMS			FEHM	RDBN	SW	D	100	SC	1		99					80					CL	0.1	OPEN HOLE
C97PT07	2	3	QMS			FEHM	RDBN	SW	D	100	SC	1		99					80					CL	0.1	OPEN HOLE
C97PT07	3	4	QMS			FE	BNGY	SW	D	100	SC	1		99					50					CL	0.1	OPEN HOLE
C97PT07	4	5	QMS	BMS		FE	OGGY	SW	D	100	SC		30	70					40							
C97PT07	5	6	QMS	BMS		FE	OGGY	SW	D	100	SC		30	70					40							
C97PT07	6	7	QMS	BMS		FE	BNGY	SW	D	100	SC	5	35	60					40							
C97PT07	7	8	QMS	BMS		FEHM	BNGY	SW	D	100	SC	1	9	90					40							
C97PT07	8	9	BMS	QMS		FEHM	BN	SW	D	100	SC	0.1	90	10					40							
C97PT07	9	10	BMS	QMS		FEHM	BN	SW	D	100	SC	0.1	90	10					40							
C97PT07	10	11	QMS	BMS		FEHM	BN	SW	D	100	SC	1	39	60					40							
C97PT07	11	12	QMS			FE	OGBN	SW	D	100	SC			100					50							
C97PT07	12	13	QMS			FE	OGBN	SW	D	100	SC			100					50							
C97PT07	13	14	QMS	BMS		FE	BNGY	SW	D	100	SC		20	80	0.1				50							
C97PT07	14	15	QMS	BMS		FE	BNGY	SW	D	100	SC	1	39	60					40							
C97PT07	15	16	QMS	BMS	QV	FE	BNGY	SW	D	100	SC	5	5	90					40							
C97PT07	16	17	QMS	BMS	QV	FE	BNGY	SW	D	100	SC	5	25	70					40							
C97PT07	17	18	QMS	BMS	QV	FE	BNGY	SW	D	100	SC	5	35	60					40							
C97PT07	18	19	QMS	BMS	QV	FE	BNGY	SW	D	100	SC	1	39	60					10							
C97PT07	19	20	QMS				GY	FR	D	100	SC			100					0.1							

Hole	Fm	To	Maj	Min1	Min2	Alter	Col	Wth	H2O	Ret	Texture	Qtz	BMS	QMS	CHT	SI	GW	SH	Lim	Py	AsPy	Oth Sulph	Per	Oth Min	Per	Comments
RC97PT07	20	21	QMS				GY	FR	D	100	SC	0.1		100												
RC97PT07	21	22	QMS				GY	FR	D	100	SC			100												
RC97PT07	22	23	QMS				GY	FR	D	100	SC			100	0.1											
RC97PT07	23	24	QMS				GY	FR	D	100	SC	0.1		100												
RC97PT07	24	25	QMS				GY	FR	D	100	SC	0.1		100												
RC97PT07	25	26	QMS				GY	FR	D	100	SC	0.1		100												
RC97PT07	26	27	QMS				GY	FR	D	100	SC	0.1		100												
RC97PT07	27	28	QMS			SI	GY	FR	D	100	SC	0.1		100												
RC97PT07	28	29	QMS				GY	FR	D	100	SC			100												
RC97PT07	29	30	QMS				GY	FR	D	100	SC			100												
RC97PT07	30	31	QMS			SE	GY	FR	D	100	SC	0.1		100												
RC97PT07	31	32	QMS			SI	GY	FR	D	100	SC			100												
RC97PT07	32	33	QMS	QV		SE	GY	FR	D	100	SC	5		95												
RC97PT07	33	34	QMS	QV		SE	GY	FR	D	100	SC	5		95												WATER TABLE
RC97PT07	34	35	QMS			SI	GY	FR	B	100	SC	0.1		100												START 22/9/97
RC97PT07	35	36	QMS			SI	GY	FR	B	100	SC	0.1		100						0.1						
RC97PT07	36	37	QMS			SI	GY	FR	B	100	SC	0.1		100						0.1						
RC97PT07	37	38	QMS	QV		SI	GYWH	FR	B	100	SC	2		98												
RC97PT07	38	39	QMS	CH	QV	SISE	GYGN	FR	B	100	SC	1		96	3											
RC97PT07	39	40	QMS	CH	QV	SISE	GYGN	FR	B	100	SC	1		95	4					0.1						
RC97PT07	40	41	QMS	CH		SISI	GYGN	FR	B	100	SC	0.1		97	3											
RC97PT07	41	42	QMS	CH	QV	SISE	GYGN	FR	B	100	SC	2		95	3											
RC97PT07	42	43	QMS	CH		SISE	GYGN	FR	B	100	SC			99	1											

Hole	Fm	To	Maj	Min1	Min2	Alter	Col	Wth	H2O	Ret	Texture	Qtz	BMS	QMS	CHT	SI	GW	SH	Lim	Py	AsPy	Oth Sulph	Per	Oth Min	Per	Comments
RC97PT07	43	44	QMS	CH		SISE	GYGN	FR	B	100	SC			99	1											
RC97PT07	44	45	QMS	CH		SISE	GYGN	FR	B	100	SC			99	1											
RC97PT07	45	46	QMS			SI	GY	FR	B	100	SC	0.1		100	0.1											
RC97PT07	46	47	QMS	CH		SISE	GYGN	FR	B	100	SC	0.1		99	1											
RC97PT07	47	48	QMS			SISE	GYGN	FR	B	100	SC			100	0.1											
RC97PT07	48	49	QMS	CH		SISE	GYGN	FR	B	100	SC	0.1		99	0.1					0.1						
RC97PT07	49	50	QMS	CH		SIKS	GYGNPK	FR	B	100	SC			99	0.1											
RC97PT07	50	51	QMS	CH		SIKS	GYGNPK	FR	B	100	SC			99	0.1											
RC97PT07	51	52	QMS	CH		SIKS	GYGNPK	FR	B	100	SC	0.1		95	5					0.1						
RC97PT07	52	53	QMS			SI	LTGY	FR	B	100	SC			100												
RC97PT07	53	54	QMS			SI	GY	FR	B	100	SC	0.1		100												
RC97PT07	54	55	QMS			SI	GY	FR	B	100	SC			100												
RC97PT07	55	56	QMS			SI	GY	FR	B	100	SC			100												
RC97PT07	56	57	QMS	QV	CH	SI	GYGNPK	FR	B	100	SC	1		99	0.1											
RC97PT07	57	58	QMS			SI	GY	FR	B	100	SC			100												
RC97PT07	58	59	QMS			SI	GY	FR	B	100	SC			100												
RC97PT07	59	60	QMS			SI	GY	FR	B	100	SC	0.1		100												
RC97PT07	60	61	QMS	QV	CH	SIKS	GYPK	FR	B	100	SC	0.1		98	2											
RC97PT07	61	62	QMS	QV	CH	SIKS	GYPK	FR	B	100	SC	0.1		98	2											
RC97PT07	62	63	QMS	QV	CH	SIKS	GYPK	FR	B	100	SC	0.1		98	2											
RC97PT07	63	64	QMS	QV	CH	SIKS	GYPK	FR	B	100	SC	0.1		99	1											
RC97PT07	64	65	QMS	QV	CH	SIKS	GYPK	FR	B	100	SC	0.1		97	3											
RC97PT07	65	66	QMS	CH		SIKS	GYPK	FR	B	100	SC			99	1											

Hole	Fm	To	Maj	Min1	Min2	Alter	Col	Wth	H2O	Ret	Texture	Qtz	BMS	QMS	CHT	SI	GW	SH	Lim	Py	AsPy	Oth Sulph	Per	Oth Min	Per	Comments
C97PT07	66	67	QMS	CH		SIKS	GYPK	FR	B	100	SC			95	5											
C97PT07	67	68	QMS	GR	CH	SIKS	GYPKWH	FR	B	100	SC			90	2									GR	8	
C97PT07	68	69	QMS	CH		SISE	GYGN	FR	B	100	SC			98	2											
C97PT07	69	70	QMS	CH		SISE	GYGN	FR	B	100	SC	0.1		95	5						0.1					
C97PT07	70	71	QMS	CH		SISE	GYGN	FR	B	100	SC	0.1		97	3						0.1					
C97PT07	71	72	QMS	GR	CH	SISE	GYGNWH	FR	B	100	SC	0.1		95	1						0.1			GR	4	
C97PT07	72	73	QMS	GR	CH	SISE	GYGNWH	FR	B	100	SC	1		94	3						0.1			GR	4	
C97PT07	73	74	QMS	GR		SIKS	GYGNKS	FR	B	100	SC			95										GR	5	
C97PT07	74	75	QMS	GR		SIKS	GYGNKS	FR	B	100	SC			95										GR	5	
C97PT07	75	76	QMS			SIKS	GYGN	FR	B	100	SC			100										GR	0.1	
C97PT07	76	77	QMS			SIKS	GYGN	FR	B	100	SC			100										GR	0.1	
C97PT07	77	78	QMS			SIKS	GYGN	FR	B	100	SC			100										GR	0.1	
C97PT07	78	79	GR			SIKS	WHPKGY	FR	B	100	SC													GR	100	
C97PT07	79	80	GR			SIKS	WHPKGY	FR	B	100	SC													GR	100	
C97PT07	80	81	GR			SIKS	WHPKGY	FR	B	100	SC													GR	100	
C97PT07	81	82	GR			SIKS	WHPKGY	FR	B	100	SC													GR	100	
C97PT08	0	1	QMS	GR		HM	OGGY	SW	D		SC			60							20			GR	40	OPEN HOLE
C97PT08	1	2	GR	QMS		FL	OG	SW	D		EQ			5							20			GR	95	OPEN HOLE
C97PT08	2	3	GR	QMS		FL	OG	SW	D		EQ			5							20			GR	95	OPEN HOLE
C97PT08	3	4	GR	QMS		FL	OG	SW	D		EQ			5							20			GR	95	OPEN HOLE
C97PT08	4	5	GR	QMS		FL	OG	SW	D		EQ			5							20			GR	95	
C97PT08	5	6	GR	QMS	QV	FE	OGGY	SW	D		EQ	10		30							20			GR	60	
C97PT08	6	7	QMS	GR		FE	GYBN	SW	D		SC	5		60							5			GR	35	

Hole	Fm	To	Maj	Min1	Min2	Alter	Col	Wth	H2O	Ret	Texture	Qtz	BMS	QMS	CHT	SI	GW	SH	Lim	Py	AsPy	Oth Sulph	Per	Oth Min	Per	Comments
C97PT08	7	8	QMS			FE	GYBN	SW	D		SC			100					2							
C97PT08	8	9	QMS			FE	GYBN	SW	D		SC			100					2							
C97PT08	9	10	QMS	QV		FE	GYBN	SW	D		SC	5		95					5							
C97PT08	10	11	QMS			FE	GY	SW	D		SC			100					1							
C97PT08	11	12	QMS			FE	GY	SW	D		SC			100					1							
C97PT08	12	13	QMS			FE	GY	SW	D		SC			100					1							
C97PT08	13	14	GR	QMS			OGYL	SW	D		EQ			30					1					GR	70	
C97PT08	14	15	GR				OGYL	SW	D		EQ								1					GR	100	
C97PT08	15	16	GR				OGYL	SW	D		EQ								1					GR	100	
C97PT08	16	17	QMS	GR			GYYL	SW	D		SC			80					1					GR	20	
C97PT08	17	18	QMS	GR			GYYL	SW	D		SC			80					1					GR	20	
C97PT08	18	19	QMS	GR			GYYL	SW	D		SC			80					1					GR	20	
C97PT08	19	20	QMS	GR			GYYL	SW	D		SC			80					1					GR	20	
C97PT08	20	21	QMS	GR			GY	SW	D		SC			80										GR	20	
C97PT08	21	22	QMS	GR			GYWH	FR	D		SC			60										GR	40	
C97PT08	22	23	GR	QMS			WHGY	FR	D		EQ			20										GR	80	
C97PT08	23	24	GR	QMS			WHGY	FR	D		EQ			20										GR	80	
C97PT08	24	25	QMS	GR		SE	GYGN	FR	D		SC			55										GR	45	
C97PT08	25	26	QMS	GR		SE	GY	FR	D		SC			95										GR	5	
C97PT08	26	27	QMS	GR		SE	GY	FR	D		SC			95										GR	5	
C97PT08	27	28	QMS	GR		SE	GY	FR	D		SC			95										GR	5	
C97PT08	28	29	QMS	GR		SE	GY	FR	D		SC			95										GR	5	
C97PT08	29	30	QMS	GR		SE	GY	FR	D		SC			95										GR	5	

Hole	Fm	To	Maj	Min1	Min2	Alter	Col	Wth	H2O	Ret	Texture	Qtz	BMS	QMS	CHT	SI	GW	SH	Lim	Py	AsPy	Oth Sulph	Per	Oth Min	Per	Comments
C97PT08	30	31	QMS	GR		SE	GY	FR	D		SC			80										GR	20	
C97PT08	31	32	QMS	GR		SE	GY	FR	D		SC			80										GR	20	
C97PT08	32	33	QMS	GR		SE	GY	FR	D		SC			80						0.1				GR	20	
C97PT08	33	34	QMS	GR		SE	GY	FR	D		SC			80						0.1				GR	20	
C97PT08	34	35	QMS	GR		SE	GY	FR	D		SC			80						0.1				GR	20	
C97PT08	35	36	QMS	GR		SE	GY	FR	D		SC			90										GR	10	
C97PT08	36	37	QMS	GR		SE	GY	FR	D		SC			95										GR	5	
C97PT08	37	38	QMS			SE	GY	FR	D		SC			100						0.1						
C97PT08	38	39	QMS			SE	GY	FR	D		SC			100						0.1						
C97PT08	39	40	GR	QMS		SE	PKGY	FR	D		EQ			40										GR	60	
C97PT08	40	41	QMS	GR		SE	GY	FR	D		SC			95										GR	5	
C97PT08	41	42	QMS	GR		SE	GY	FR	D		SC			95										GR	5	
C97PT08	42	43	QMS	GR		SE	GY	FR	D		SC			95										GR	5	
C97PT08	43	44	QMS	GR		SE	GY	FR	D		SC			95										GR	5	
C97PT08	44	45	QMS	GR		SE	GY	FR	D		SC			95										GR	5	
C97PT08	45	46	QMS	GR		SE	GYWH	FR	D		SC			80										GR	20	
C97PT08	46	47	QMS	BMS			GY	FR	D		SC		10	90										GR	0.1	
C97PT08	47	48	BMS	QMS			GY	FR	D		SC		70	30												
C97PT08	48	49	BMS	QMS			GY	FR	D		SC		70	30												
C97PT08	49	50	BMS	QMS			GY	FR	D		SC		70	30												
C97PT08	50	51	BMS	QMS			GY	FR	D		SC		70	30												
C97PT08	51	52	QMS				GY	FR	D		SC			100						0.5						
C97PT08	52	53	QMS				GY	FR	D		SC			99						1						

Hole	Fm	To	Maj	Min1	Min2	Alter	Col	Wth	H2O	Ret	Texture	Qtz	BMS	QMS	CHT	SI	GW	SH	Lim	Py	AsPy	Oth Sulph	Per	Oth Min	Per	Comments
C97PT08	53	54	QMS				GY	FR	D		SC			99						1						
C97PT08	54	55	QMS				GY	FR	D		SC			100						0.5						
C97PT08	55	56	BMS	QMS	QV		GY	FR	B		SC	10	60	30						0.5						WATER TABLE
C97PT08	56	57	QMS	BMS			GY	FR	B		SC	2	27	70						1						
C97PT08	57	58	QMS	BMS			GY	FR	B		SC	2	27	70						1						
C97PT08	58	59	QMS	BMS			GY	FR	B		SC	2	27	70						1						
C97PT08	59	60	QMS	BMS			GY	FR	B		SC	2	27	70						1						
C97PT08	60	61	QMS	BMS		SE	GY	FR	B		SC	0.1	30	70						0.1						
C97PT08	61	62	QMS	BMS		SE	GY	FR	B		SC	0.1	30	70						0.5						
C97PT08	62	63	QMS	BMS		SE	GYGN	FR	B		SC	0.1	30	70						0.1						
C97PT08	63	64	QMS	BMS		SE	GYGN	FR	B		SC	0.1	5	95												
C97PT08	64	65	QMS			SE	GYGN	FR	B		SC			100	0.1											
C97PT08	65	66	QMS			SE	GY	FR	B		SC			100												
C97PT08	66	67	QMS	QV		SE	GYGN	FR	B		SC	2		98						0.1						
C97PT08	67	68	QMS			SE	GYGN	FR	B		SC			100												
C97PT08	68	69	QMS			SE	GYGN	FR	B		SC	1		99						0.5						
C97PT08	69	70	QMS			SE	GYGN	FR	B		SC			100												
C97PT08	70	71	QMS			SE	GYGN	FR	B		SC			100						0.1						
C97PT08	71	72	QMS			SE	GY	FR	B		SC	1		99						0.1						
C97PT08	72	73	QMS				GY	FR	B		SC			100						0.1						
C97PT08	73	74	QMS			SE	GY	FR	B		SC	0.1		100												
C97PT08	74	75	QMS			SE	GY	FR	B		SC	0.1		100												
C97PT08	75	76	QMS			SE	GY	FR	B		SC	1		99												

Hole	Fm	To	Maj	Min1	Min2	Alter	Col	Wth	H2O	Ret	Texture	Qtz	BMS	QMS	CHT	SI	GW	SH	Lim	Py	AsPy	Oth Sulph	Per	Oth Min	Per	Comments
RC97PT08	76	77	QMS				GY	FR	B		SC			100												
RC97PT08	77	78	QMS			SE	GY	FR	B		SC			100												
RC97PT08	78	79	QMS				GY	FR	B		SC			100												
RC97PT08	79	80	QMS				GY	FR	B		SC			100						0.1						
RC97PT08	80	81	QMS				GY	FR	B		SC			100						0.1						
RC97PT08	81	82	QMS				GY	FR	B		SC	0.1		100						0.1						E.O.H.
RC97PT09	0	2	QMS				BNGY	SW	D		SC			100					10							OPEN HOLE
RC97PT09	2	3	QMS				GYBN	SW	D		SC			100					5	0.1						OPEN HOLE
RC97PT09	3	4	QMS				GYBN	SW	D		SC			100					5	0.1						OPEN HOLE
RC97PT09	4	5	QMS			HM	RDBNGY	SW	D		SC			100					5	0.1						
RC97PT09	5	6	QMS			HM	GYBN	SW	D		SC	1		99					3	0.1						
RC97PT09	6	7	QMS			HM	GYBN	SW	D		SC	1		99					3	0.1						
RC97PT09	7	8	QMS			HM	GYBN	SW	D		SC	1		99					2	0.1						
RC97PT09	8	9	QMS			HM	GYBN	SW	D		SC	1		99					2	0.1						
RC97PT09	9	10	QMS	QV		HM	GYBN	SW	D		SC	5		95					2							
RC97PT09	10	11	QMS				GYBN	SW	D		SC			100					1							
RC97PT09	11	12	QMS				GYBN	SW	D		SC			100					1							
RC97PT09	12	13	QMS				GY	SW	D		SC			100					0.1	0.1						
RC97PT09	13	14	QMS			SE	GYLTGN	SW	D		SC			100					0.1							
RC97PT09	14	15	QMS			SE	GYBN	SW	D		SC			100					2							
RC97PT09	15	16	QMS				GY	SW	D		SC			100					1							
RC97PT09	16	17	QMS	QV		SE	GYGN	SW	D		SC	10		90					0.1							
RC97PT09	17	18	QMS	QV		SE	GY	FR	D		SC	2		98						0.1						

Hole	Fm	To	Maj	Min1	Min2	Alter	Col	Wth	H2O	Ret	Texture	Qtz	BMS	QMS	CHT	SI	GW	SH	Lim	Py	AsPy	Oth Sulph	Per	Oth Min	Per	Comments
RC97PT09	18	19	QMS				GY	FR	D		SC			100						0.1						
RC97PT09	19	20	QMS				GY	FR	D		SC			100						0.1						
RC97PT09	20	21	QMS	QV		FTSE	GY	FR	D		SC	2		98						0.1						
RC97PT09	21	22	QMS	QV		SE	GYGN	FR	D		SC	1		99						0.1						
RC97PT09	22	23	QV	QMS		SE	LTGNGY	FR	D		SC	70		30						0.5						
RC97PT09	23	24	QMS	QV		SE	GYGN	FR	D		SC	10		90						0.1						
RC97PT09	24	25	QMS	QV		SE	GYGN	FR	D		SC	5		95												
RC97PT09	25	26	QMS			SE	GY	FR	D		SC			100												
RC97PT09	26	27	QMS	QV		SE	GNGY	FR	D		SC	5		95												
RC97PT09	27	28	QMS	QV		SE	GNGY	FR	D		SC	5		95						0.1						
RC97PT09	28	29	QMS				GY	FR	D		SC			100												
RC97PT09	29	30	QMS			SE	GY	FR	D		SC			100												
RC97PT09	30	31	QMS	QV		SE	GYGN	FR	D		SC	5		95												
RC97PT09	31	32	QMS			SE	GY	FR	D		SC	0.1		100						0.1						
RC97PT09	32	33	QMS			SE	GY	FR	D		SC	0.1		100						0.1						
RC97PT09	33	34	GR	QMS		SE	GNGY	FR	D		SC			30						0.1				GR	70	
RC97PT09	34	35	GR	QMS		SE	GNGY	FR	D		SC			20						0.1				GR	80	
RC97PT09	35	36	QMS			SE	GYGN	FR	D		SC			100												
RC97PT09	36	37	QMS			SE	GYGN	FR	D		SC			100												
RC97PT09	37	38	QMS			SE	GYGN	FR	D		SC			100												
RC97PT09	38	39	QMS			SE	GYGN	FR	D		SC			100												
RC97PT09	39	40	QMS	GR		SE	GYGN	FR	D		SC			95										GR	5	
RC97PT09	40	41	GR	QMS		SFKS	LTGNPK	FR	D		EQ			30										GR	70	

Hole	Fm	To	Maj	Min1	Min2	Alter	Col	Wth	H2O	Ret	Texture	Qtz	BMS	QMS	CHT	SI	GW	SH	Lim	Py	AsPy	Oth Sulph	Per	Oth Min	Per	Comments
C97PT09	41	42	GR	QMS		SEKS	GNGY	FR	D		EQ			5						0.5				GR	95	
C97PT09	42	43	GR			KSSE	PKGN	FR	D		EQ													GR	100	
C97PT09	43	44	QMS	GR		KSSE	GYPKGN	FR	D		SC			90										GR	10	
C97PT09	44	45	QMS	BMS		SE	GYGN	FR	D		SC		20	80						0.1						
C97PT09	45	46	QMS	BMS		SE	GYGN	FR	B		SC		20	80						0.1						WATER TABLE
C97PT09	46	47	QMS	BMS		SE	GYGN	FR	B		SC		20	80						0.1						
C97PT09	47	48	QMS	BMS		SE	GYGN	FR	B		SC		20	80						0.1						
C97PT09	48	49	QMS	GR		SEKS	GYGNPK	FR	B		SC			90						0.1				GR	10	
C97PT09	49	50	QMS				GY	FR	B		SC			100												
C97PT09	50	51	QMS			SE	GY	FR	B		SC	0.1		100	0.1											
C97PT09	51	52	QMS			SE	GY	FR	B		SC			100												
C97PT09	52	53	QMS			SE	GY	FR	B		SC	1		99												
C97PT09	53	54	QMS	GR		SE	GYGN	FR	B		SC	2		88										GR	10	
C97PT09	54	55	QMS			SE	GY	FR	B		SC			100												
C97PT09	55	56	QMS			SE	GYGN	FR	B		SC			100												
C97PT09	56	57	QMS			SE	GYGN	FR	B		SC			100												
C97PT09	57	58	QMS			SE	GYGN	FR	B		SC			100												
C97PT09	58	59	QMS	GR	QV	SEKS	GYGN	FR	B		SC	10		60						0.1				GR	30	
C97PT09	59	60	QMS	GR	QV	SEKS	GYGN	FR	B		SC	10		60						0.1				GR	30	
C97PT09	60	61	GR	QMS		SE	GYGN	FR	B		SC			30						0.1				GR	70	
C97PT09	61	62	GR			SE	GN	FR	B		SC									0.1				GR	100	
C97PT09	62	63	QMS	GR		SE	GYGN	FR	B		SC	2		60						0.1				GR	38	
C97PT09	63	64	QMS	GR		SE	GYGN	FR	B		SC	2		90						0.1				GR	8	

Hole	Fm	To	Maj	Min1	Min2	Alter	Col	Wth	H2O	Ret	Texture	Qtz	BMS	QMS	CHT	SI	GW	SH	Lim	Py	AsPy	Oth Sulph	Per	Oth Min	Per	Comments
C97PT09	64	65	QMS	GR		SE	GYGN	FR	B		SC	2		90						0.1				GR	8	
C97PT09	65	66	QMS			SE	GY	FR	B		SC	0.1		100												
C97PT09	66	67	QMS			SE	GY	FR	B		SC	0.1		100												
C97PT09	67	68	QMS			SE	GY	FR	B		SC	0.1		100												
C97PT09	68	69	QMS			SE	GY	FR	B		SC	0.1		100												
C97PT09	69	70	QMS			SE	GY	FR	B		SC	0.1		100												
C97PT09	70	71	QMS	QV			GY	FR	B		SC	5		95						0.5						
C97PT09	71	72	QMS	QV			GY	FR	B		SC	39		60						1						
C97PT09	72	73	QMS	QV			GY	FR	B		SC	9		90						1						
C97PT09	73	74	QMS	QV			GY	FR	B		SC	1		98						1						
C97PT09	74	75	QMS				GY	FR	B		SC	0.1		98						2						
C97PT09	75	76	QMS				GY	FR	B		SC			99						1						
C97PT09	76	77	QMS	QV		SE	GYWHGN	FR	B	100	SC	10		90						0.5						
C97PT09	77	78	QMS	QV		SEGP	GY	FR	B	100	SC	1		99						0.5						
C97PT09	78	79	QMS	QV		SEGP	GY	FR	B	100	SC	5		94						1						
C97PT09	79	80	QMS	QV		SEGP	GY	FR	B	100	SC	2		97						1						
C97PT09	80	81	QMS	BMS	QV	SEGP	GY	FR	B	100	SC	2	20	75	2					1						
C97PT09	81	82	BMS	QV		SEGP	GY	FR	B	100	SC	1	99							0.1						E.O.H.
C97PT10	0	2	QV	QMS		FFHM	GYRD	SW	D	80	SC	60		40					5							OPEN HOLE
C97PT10	2	3	QV	QMS		FFHM	GYRD	SW	D	100	SC	60		40					5							OPEN HOLE
C97PT10	3	4	QMS	QV		FE	GY	SW	D	100	SC	5		95					2							OPEN HOLE
C97PT10	4	5	QMS			FE	GY	SW	D	100	SC			100					2							
C97PT10	5	6	QMS			FE	GYOG	SW	D	100	SC			100					10							

Hole	Fm	To	Maj	Min1	Min2	Alter	Col	Wth	H2O	Ret	Texture	Qtz	BMS	QMS	CHT	SI	GW	SH	Lim	Py	AsPy	Oth Sulph	Per	Oth Min	Per	Comments
RC97PT10	6	7	QMS			FE	GY	SW	D	100	SC	0.1		100					5							
RC97PT10	7	8	QMS			FE	GY	SW	D	100	SC	0.1		100					5							
RC97PT10	8	9	QMS			FE	GY	SW	D	100	SC	0.1		100					5							
RC97PT10	9	10	QMS			FE	GY	FR	D	100	SC			100												
RC97PT10	10	11	QMS	GR	QV	GP	GYPKWH	FR	D	100	SC	5		50						0.1				GR	45	
RC97PT10	11	12	GR			GP	PKWH	FR	D	100	EQ									0.1				GR	100	
RC97PT10	12	13	QMS	QV		GPSE	GY	FR	D	100	SC	5		95						0.1						
RC97PT10	13	14	QV	QMS		GP	WHGY	FR	D	100	SC	80		20						0.1	0.1					
RC97PT10	14	15	QMS	GR	QV	GP	GYPK	FR	D	100	SC	10		50						0.1				GR	40	
RC97PT10	15	16	GR	QMS		GPSE	PKGNGY	FR	D	100	EQ			40						0.1				GR	60	
RC97PT10	16	17	GR			GPSE	PKGNGY	FR	D	100	EQ													GR	100	
RC97PT10	17	18	GR	QMS		GPSE	PKGNGY	FR	D	100	EQ			10										GR	90	
RC97PT10	18	19	GR	QMS		GPSE	PKGNGY	FR	D	100	EQ			10										GR	90	
RC97PT10	19	20	QMS	GR		GP	GYPK	FR	D	100	SC			60										GR	40	
RC97PT10	20	21	QMS	BMS	GR	GP	GY	FR	D	100	SC	0.1	20	60										GR	20	
RC97PT10	21	22	QMS			GP	GY	FR	D	100	SC			100												
RC97PT10	22	23	GR	QMS		GPSE	PKGNGY	FR	D	100	EQ			10										GR	90	
RC97PT10	23	24	BMS	QMS		GP	GY	FR	D	100	SC		60	40						0.1				GR	0.1	
RC97PT10	24	25	QMS			GP	GY	FR	D	100	SC			100						0.1				GR	0.1	
RC97PT10	25	26	QMS			GPSE	GY	FR	D	100	SC			100						0.1				GR	0.1	
RC97PT10	26	27	QMS	GR		GPSE	GYPK	FR	D	100	SC			80						0.1				GR	20	
RC97PT10	27	28	QMS	BMS		GP	GY	FR	D	100	SC		20	80						0.1						
RC97PT10	28	29	GR	QMS		SEGP	GNPKGY	FR	D	100	EQ			30						0.1				GR	70	

Hole	Fm	To	Maj	Min1	Min2	Alter	Col	Wth	H2O	Ret	Texture	Qtz	BMS	QMS	CHT	SI	GW	SH	Lim	Py	AsPy	Oth Sulph	Per	Oth Min	Per	Comments
RC97PT10	29	30	GR			SEGP	GNWHGY	FR	D	100	EQ			1										GR	99	
RC97PT10	30	31	QMS	GR		SE	GYGN	FR	D	100	SC			70										GR	30	
RC97PT10	31	32	QMS	GR		SE	GYGN	FR	D	100	SC			90										GR	10	
RC97PT10	32	33	QMS	GR		SE	GYGN	FR	D	100	SC			90										GR	10	
RC97PT10	33	34	QMS	BMS	GR	SE	GY	FR	D	100	SC		30	60										GR	10	
RC97PT10	34	35	GR	QMS		GP	PKGY	FR	D	100	SC			50										GR	50	
RC97PT10	35	36	QMS			GP	GY	FR	D	100	SC	0.1		100												
RC97PT10	36	37	QMS	GR	QV	GPSE	GYWHPK	FR	D	100	SC	15		70										GR	15	
RC97PT10	37	38	QMS	GR		GP	GY	FR	D	100	SC	0.1		95										GR	5	
RC97PT10	38	39	QMS	GR		GP	GY	FR	D	100	SC	0.1		95										GR	5	
RC97PT10	39	40	QMS			GP	GY	FR	B	100	SC	1		99												WATER TABLE
RC97PT10	40	41	QMS			GP	GY	FR	B	100	SC			100												
RC97PT10	41	42	QMS	BMS		GP	GY	FR	B	100	SC		20	80												
RC97PT10	42	44	QMS	GR	QV	GPSE	GY	FR	B	100	SC	3		95										GR	2	
RC97PT10	44	45	QMS	GR		GPSE	GY	FR	B	100	SC			90										GR	10	
RC97PT10	45	46	QMS	BMS	GR	GPSE	GY	FR	B	100	SC		30	60								0.1		GR	10	
RC97PT10	46	47	QMS	GR			GYPK	FR	B	100	SC			80										GR	20	
RC97PT10	47	48	GR	QMS		SE	GNPK	FR	B	100	EQ			10										GR	90	
RC97PT10	48	49	GR	QMS	QV	SE	GNPK	FR	B	100	EQ	5		20										GR	75	OPAL PRESENT AS TRACE
RC97PT10	49	50	QMS	GR	QV	SE	GY	FR	B	100	SC	1		95										GR	4	
RC97PT10	50	51	QMS	BMS	QV	SE	GY	FR	B	100	SC	5	45	50								0.5				
RC97PT10	51	52	QMS	BMS	QV	SE	GY	FR	B	100	SC	5	45	50								0.5				
RC97PT10	52	53	BMS	QMS			GY	FR	B	100	SC		60	40								0.1				

Hole	Fm	To	Maj	Min1	Min2	Alter	Col	Wth	H2O	Ret	Texture	Qtz	BMS	QMS	CHT	SI	GW	SH	Lim	Py	AsPy	Oth Sulph	Per	Oth Min	Per	Comments
C97PT10	53	54	BMS	QMS	QV	SE	GY	FR	B	100	SC	5	50	45						0.1						
C97PT10	54	55	QMS	BMS	QV	SE	GYGN	FR	B	100	SC	5	25	70						0.1						
C97PT10	55	56	QMS	BMS	QV		GY	FR	B	100	SC	1	19	80						0.1						
C97PT10	56	57	QMS				GY	FR	B	100	SC			100						0.1						
C97PT10	57	58	QMS				GY	FR	B	100	SC			100						0.1						
C97PT10	58	59	QMS			GP	GY	FR	B	100	SC			100						0.1						
C97PT10	59	60	QMS			SEGP	GY	FR	B	100	SC	1.5		98						0.5						
C97PT10	60	61	QMS			GP	GY	FR	B	100	SC	9		90						1						
C97PT10	61	62	BMS	QMS	QV	GP	GY	FR	B	100	SC	10	70	20						0.5						
C97PT10	62	63	BMS	QMS	QV	GP	GY	FR	B	100	SC	9	70	20						1						
C97PT10	63	64	BMS	QMS	QV	GP	GY	FR	B	100	SC	0.1	90	10						0.1						
C97PT10	64	65	BMS	QMS	QV	SE	GY	FR	B	100	SC	0.1	90	10						0.5						
C97PT10	65	66	QMS	BMS			GY	FR	B	100	SC	0.1	45	55						0.1						
C97PT10	66	67	BMS	QMS		SE	GY	FR	B	100	SC	0.1	70	30						0.1						
C97PT10	67	68	BMS	QMS		SE	GY	FR	B	100	SC	0.1	70	30						0.1						
C97PT10	68	69	BMS	QMS		SE	GY	FR	B	100	SC	0.1	70	30						0.1						
C97PT10	69	70	BMS	QMS	QV	SE	GY	FR	B	100	SC	5	70	25						0.1						
C97PT10	70	71	BMS	QMS		SEGP	GY	FR	B	100	SC		55	45						0.5						
C97PT10	71	72	QMS	BMS		GP	GY	FR	B	100	SC		40	60	0.1					0.1						
C97PT10	72	73	BMS	QMS		GP	GY	FR	B	100	SC		70	30	0.1					0.1						
C97PT10	73	74	QMS	BMS		GP	GY	FR	B	100	SC		20	80						0.1						
C97PT10	74	75	QMS	BMS		GP	GY	FR	B	100	SC		20	80						0.1						
C97PT10	75	76	BMS	QMS			GY	FR	B	100	SC		95	5						0.1						

Hole	Fm	To	Maj	Min1	Min2	Alter	Col	Wth	H2O	Ret	Texture	Qtz	BMS	QMS	CHT	SI	GW	SH	Lim	Py	AsPy	Oth Sulph	Per	Oth Min	Per	Comments
C97PT10	76	77	BMS				GY	FR	B	100	SC		100							0.1						
C97PT10	77	78	BMS	QMS			GY	FR	B	100	SC		90	10	0.1					0.1						
C97PT10	78	79	BMS	QMS			GY	FR	B	100	SC		90	10						0.1						
C97PT10	79	80	BMS	QMS			GY	FR	B	100	SC		90	10						0.1						
C97PT10	80	81	BMS	QMS			GY	FR	B	100	SC		70	30						0.5						
C97PT10	81	82	BMS	QMS	GR	SE	GY	FR	B	100	SC	1	50	40						0.1				GR	9	
C97PT10	82	83	BMS	QMS			GY	FR	B	100	SC	1	78	20	1					0.1						
C97PT10	83	84	BMS				GY	FR	B	100	SC		100													
C97PT10	84	85	BMS				GY	FR	B	100	SC		100							0.1						
C97PT10	85	86	BMS				GY	FR	B	100	SC		100							0.1						
C97PT10	86	87	BMS	QMS		SE	GY	FR	B	100	SC	1	78	20						1						
C97PT10	87	88	BMS	QMS			GY	FR	B	100	SC		80	20						0.1						
C97PT10	88	89	BMS	QMS		GA	GY	FR	B	100	SC	0.1	80	20						0.1						
C97PT10	89	90	BMS	QMS		GA	GY	FR	B	100	SC	0.1	80	19						1						
C97PT10	90	91	BMS	QMS			GY	FR	B	100	SC		60	40						0.1						
C97PT10	91	92	BMS	QMS		SE	GY	FR	B	100	SC		60	40						0.1						
C97PT10	92	93	BMS	QMS		SEGA	GY	FR	B	100	SC		80	20						0.1						
C97PT10	93	94	BMS	QMS		SE	GY	FR	B	100	SC		80	20						0.1						
C97PT10	94	95	BMS	QMS			GY	FR	B	100	SC	0.1	90	10						0.1						
C97PT10	95	96	BMS	QMS			GY	FR	B	100	SC	0.1	90	10						0.1						
C97PT10	96	97	BMS	QMS			GY	FR	B	100	SC	0.1	70	30						0.1						
C97PT10	97	98	BMS	QMS		SE	GY	FR	B	100	SC	0.1	70	30						0.1						
C97PT10	98	99	BMS	QMS	GR	SE	GY	FR	B	100	SC	0.1	70	20						0.1				GR	10	

Hole	Fm	To	Maj	Min1	Min2	Alter	Col	Wth	H2O	Ret	Texture	Qtz	BMS	QMS	CHT	SI	GW	SH	Lim	Py	AsPy	Oth Sulph	Per	Oth Min	Per	Comments
97PT10	99	100	BMS	QMS			GY	FR	B	100	SC		60	40						0.1						E.O.H.
97PT11	0	1	CL	QMS		HM	RDBN	EW	D	60	SC			50					40					CL	50	OPEN HOLE
97PT11	1	2	CL	QMS		HM	TNBN	EW	D	100	SC			40					50					CL	60	OPEN HOLE
97PT11	2	3	QMS	CL		HM	BNGY	HW	D	100	SC			70					30					CL	30	OPEN HOLE
97PT11	3	4	QMS	CL		HM	GYBN	MW	D	100	SC			90					20					CL	10	OPEN HOLE
97PT11	4	5	QMS	QV	CL	HM	BNRDGY	MW	D	100	SC	15		80					40					CL	5	
97PT11	5	6	QMS			HM	GYBN	SW	D	100	SC			100					10							
97PT11	6	7	QMS	BMS	CI	HM	GYBN	SW	D	100	SC		40	50					10					CL	10	
97PT11	7	8	QMS	BMS	CI	HM	GYBN	SW	D	100	SC		40	50					10					CL	10	
97PT11	8	9	QMS	BMS		HM	GYBN	SW	D	100	SC		40	60					5							
97PT11	9	10	QMS	BMS		HM	GYBN	SW	D	100	SC		40	60					5							
97PT11	10	11	QMS			HM	GYBN	SW	D	100	SC			100					5							
97PT11	11	12	QMS			HM	GYBN	SW	D	100	SC			100					5							
97PT11	12	13	QMS	GR			GY	SW	D	100	SC			95					2					GR	5	
97PT11	13	14	QMS				GY	SW	D	100	SC	0.1		100					2							
97PT11	14	15	QMS				GY	SW	D	100	SC	0.1		100					2							
97PT11	15	16	QMS				GY	SW	D	100	SC	0.1		100					2							PINK SACCHAROIDAL QZ
97PT11	16	17	QMS			GP	GY	SW	D	100	SC			100					2							
97PT11	17	18	QMS			GP	GY	SW	D	100	SC			100					1							
97PT11	18	19	QMS			GP	GY	SW	D	100	SC	0.1		100					1							
97PT11	19	20	QMS	GR		GP	GY	FR	D	100	SC	0.1		95										GR	5	
97PT11	20	21	QMS			SEGP	GY	FR	D	100	SC			100						0.1						
97PT11	21	22	QMS			SEGP	GY	FR	D	100	SC			100						0.1						

Hole	Fm	To	Maj	Min1	Min2	Alter	Col	Wth	H2O	Ret	Texture	Qtz	BMS	QMS	CHT	SI	GW	SH	Lim	Py	AsPy	Oth Sulph	Per	Oth Min	Per	Comments
C97PT11	22	23	QMS	BMS		SEGP	GY	FR	D	100	SC		30	70	0.1					0.1						
C97PT11	23	24	QMS	BMS		GP	GY	FR	D	100	SC		20	80						0.1						
C97PT11	24	25	QMS			GP	GY	FR	D	100	SC			100												
C97PT11	25	26	QMS			GP	GY	FR	B	100	SC			100												WATER TABLE
C97PT11	26	27	QMS			GP	GY	FR	B	100	SC			100												
C97PT11	27	28	QMS			GPKS	GY	FR	B	100	SC			100	0.1											
C97PT11	28	29	BMS	QMS		GPKS	GY	FR	B	100	SC	0.1	60	40						0.1						
C97PT11	29	30	QMS			GP	GY	FR	B	100	SC			100	0.1					0.1						
C97PT11	30	31	QMS			GPSE	GY	FR	B	100	SC			100	0.1					0.1						
C97PT11	31	32	QMS			GPSE	GY	FR	B	100	SC			100	0.1					0.1						
C97PT11	32	33	QMS			GPSE	GY	FR	B	100	SC			100	0.1					0.1						
C97PT11	33	34	QMS			GPSE	GY	FR	B	100	SC			100	0.1					0.1						
C97PT11	34	35	QMS			GPSE	GY	FR	B	100	SC	1		99	0.1					0.1						
C97PT11	35	36	QMS				GY	FR	B	100	SC			100						0.1						
C97PT11	36	37	QMS			KS	GY	FR	B	100	SC	0.1		100						0.1						
C97PT11	37	38	QMS	GR		KS	GYPK	FR	B	100	SC	0.1		50										GR	50	
C97PT11	38	39	GR			KS	PK	FR	B	100	EQ	0.1												GR	100	
C97PT11	39	40	QMS	GR		KS	GYPK	FR	B	100	SC	0.1		80										GR	20	
C97PT11	40	41	QMS	GR		SEKS	GY	FR	B	100	SC			99						0.1				GR	1	
C97PT11	41	42	QMS	GR		SEKS	GY	FR	B	100	SC			99						0.1				GR	1	
C97PT11	42	43	QMS	GR		SEKS	GY	FR	B	100	SC			99						0.1				GR	1	
C97PT11	43	44	QMS	GR		SEKS	GY	FR	B	100	SC			95						0.1				GR	5	
C97PT11	44	45	QMS	GR		SEKS	GY	FR	B	100	SC			99						0.1				GR	1	

Hole	Fm	To	Maj	Min1	Min2	Alter	Col	Wth	H2O	Ret	Texture	Qtz	BMS	QMS	CHT	SI	GW	SH	Lim	Py	AsPy	Oth Sulph	Per	Oth Min	Per	Comments
RC97PT11	45	46	QMS	GR		SEKS	GYGN	FR	B	100	SC			99						0.1				GR	1	
RC97PT11	46	47	QMS	GR		SE	GYPK	FR	B	100	SC	0.1		90						0.1				GR	10	
RC97PT11	47	48	GR	QMS		SE	PKGN	FR	B	100	EQ			10						0.1				GR	90	
RC97PT11	48	49	GR	QMS		SE	PKGN	FR	B	100	EQ			1						0.1				GR	99	
RC97PT11	49	50	GR	QMS		SE	PKGN	FR	B	100	EQ			1						0.1				GR	99	
RC97PT11	50	51	GR			SE	PKGN	FR	B	100	EQ	0.1								1				GR	99	
RC97PT11	51	52	QMS				GY	FR	B	100	SC			100						0.5				GR	0.1	
RC97PT11	52	53	GR	QV		SE	PKWH	FR	B	100	EQ	50								0.1				GR	50	
RC97PT11	53	54	QMS	QV	GR	SE	GYWH	FR	B	100	SC	20		75						1	1			GR	3	
RC97PT11	54	55	QMS	QV		SE	GY	FR	B	100	SC	2		98						0.1	0.1					
RC97PT11	55	56	BMS	QMS	QV		GY	FR	B	100	SC	5	65	30						0.1						
RC97PT11	56	57	QMS	QV			GY	FR	B	100	SC	5		95						0.1						
RC97PT11	57	58	QMS	BMS	QV	SE	GY	FR	B	100	SC	1	44	55						0.1				GR	0.1	
RC97PT11	58	59	QMS			SE	GY	FR	B	100	SC			100												
RC97PT11	59	60	QMS			SE	GY	FR	B	100	SC			100	0.1					0.1						
RC97PT11	60	61	QMS	BMS			GY	FR	B	100	SC		45	55						0.1						MUSCOVITE MICA FLAKES PRESENT
RC97PT11	61	62	QMS	GR		SE	GYGN	FR	B	100	SC	0.1		55						0.1				GR	45	
RC97PT11	62	63	QMS	GR		SE	GY	FR	B	100	SC	0.1		95						0.1				GR	5	
RC97PT11	63	64	QMS	BMS	QV	SE	GY	FR	B	100	SC	3	37	60						0.1						
RC97PT11	64	65	QMS	QV		SE	GY	FR	B	100	SC	5		95												
RC97PT11	65	66	QMS	QV		SE	GY	FR	B	100	SC	5		95												
RC97PT11	66	67	QMS	QV		SE	GY	FR	B	100	SC	2		98												
RC97PT11	67	68	QMS	BMS			GY	FR	B	100	SC		30	70						0.1						

Hole	Fm	To	Maj	Min1	Min2	Alter	Col	Wth	H2O	Ret	Texture	Qtz	BMS	QMS	CHT	SI	GW	SH	Lim	Py	AsPy	Oth Sulph	Per	Oth Min	Per	Comments
C97PT11	68	69	QMS			SE	GY	FR	B	100	SC			100						0.1						
C97PT11	69	70	GR	QMS		SEKS	GNPK	FR	B	100	EQ			5										GR	95	
C97PT11	70	71	GR	QMS		SE	PKGN	FR	B	100	EQ			2						0.1				GR	98	
C97PT11	71	72	BMS	QMS	GR	KS	GYPK	FR	B	100	SC		75	20										GR	5	
C97PT11	72	73	BMS	GR		SEKS	GYPK	FR	B	100	SC		95											GR	5	
C97PT11	73	74	BMS	QMS	GR	SEKS	GYPK	FR	B	100	SC		85	10										GR	5	
C97PT11	74	75	BMS	QMS	GR	SEKS	GYPK	FR	B	100	SC		85	10										GR	5	
C97PT11	75	76	BMS	QMS	GR	SEKS	GYGN	FR	B	100	SC		65	10										GR	25	
C97PT11	76	77	BMS	QMS	CH	SE	GY	FR	B	100	SC		85	10	5											
C97PT11	77	79	GR	QMS		SE	GNGY	FR	B	100	EQ			30						0.1				GR	70	
C97PT11	79	80	QMS	GR		SE	GYGN	FR	B	100	SC			80						0.1				GR	20	
C97PT11	80	81	BMS	QMS	GR	SE	GY	FR	B	100	SC		80	10						0.1				GR	10	
C97PT11	81	82	BMS	QMS	QV	SE	GY	FR	B	100	SC	5	80	10						0.1				GR	5	
C97PT11	82	83	QMS	BMS			GY	FR	B	100	SC		20	80						0.1						
C97PT11	83	84	QMS	BMS	GR	SEKS	GY	FR	B	100	SC	0.1	15	80						0.1				GR	5	
C97PT11	84	85	QMS	BMS	GR	SEKS	GY	FR	B	100	SC	0.1	15	80						0.1				GR	5	
C97PT11	85	86	QMS	BMS	GR	SEKS	GY	FR	B	100	SC	0.1	15	80						0.1				GR	5	
C97PT11	86	87	QMS	BMS	GR	SEKS	GY	FR	B	100	SC	0.1	10	85						0.1				GR	5	
C97PT11	87	88	QMS	BMS	QV	SE	GY	FR	B	100	SC	5	10	85						0.1						
C97PT11	88	89	BMS	QMS	QV	SE	GY	FR	B	100	SC	5	85	10						0.5						
C97PT11	89	90	BMS	QV	QMS	SE	GYWH	FR	B	100	SC	20	70	9						1	0.1					
C97PT11	90	91	QV	BMS		SE	WHGYGN	FR	B	100	SC	80	19							1	0.1					
C97PT11	91	92	BMS	QMS	CH	SE	GY	FR	B	100	SC	0.1	55	40	5					0.5						

Hole	Fm	To	Maj	Min1	Min2	Alter	Col	Wth	H2O	Ret	Texture	Qtz	BMS	QMS	CHT	SI	GW	SH	Lim	Py	AsPy	Oth Sulph	Per	Oth Min	Per	Comments
C97PT11	92	93	BMS	QMS	CH	SE	GY	FR	B	100	SC	0.1	75	20	5					0.5						
C97PT11	93	94	BMS	QMS	CH	SE	GY	FR	B	100	SC	0.1	85	10	4					1						
C97PT11	94	95	BMS	QMS	QV		GY	FR	B	100	SC	5	85	10						0.1						
C97PT11	95	96	BMS	QMS	CH	SE	GY	FR	B	100	SC	0.1	85	10	5					0.1						
C97PT11	96	97	BMS	QMS	CH	SE	GY	FR	B	100	SC	0.1	85	10	5					0.1						
C97PT11	97	98	BMS	QMS			GY	FR	B	100	SC	0.1	90	10						0.1						
C97PT11	98	99	BMS	QMS	GR	KS	GY	FR	B	100	SC	0.1	85	10						0.1				GR	5	
C97PT11	99	100	BMS	QMS	CH	SE	GYGN	FR	B	100	SC	0.1	75	10	15					0.1						
C97PT11	100	101	CH	BMS	QV	SE	GYGN	FR	B	100	SC	5	40		55					0.1						
C97PT11	101	102	CH	BMS	QV	SE	GYGN	FR	B	100	SC	5	40		55											
C97PT11	102	103	CH	BMS	QV	SEKS	GYGN	FR	B	100	SC	2	30		68					0.1						
C97PT11	103	104	BMS	CH	QV	SE	GY	FR	B	100	SC	2	80		18					0.1						
C97PT11	104	105	BMS	CH	QV	SL	GY	FR	B	100	SC	2	80		18					0.1						ROSE AND SM QZ PRESENT
C97PT11	105	106	QMS	BMS	QV	SL	GYWH	FR	B	100	SC	10	15	70	5					0.1						
C97PT11	106	107	BMS	QV		SE	GY	FR	B	100	SC	5	95							0.1						
C97PT11	107	108	BMS	CH	QV	SEGA	GY	FR	B	100	SC	5	80		15					0.1						
C97PT11	108	109	BMS	QMS	CH	SE	GY	FR	B	100	SC	0.1	80	10	10					0.1	0.1					
C97PT11	109	110	BMS	QMS	CH		GY	FR	B	100	SC		90	5	5					0.1						
C97PT11	110	111	BMS	QMS			GY	FR	B	100	SC		60	40						0.1						
C97PT11	111	112	QMS	BMS			GY	FR	B	100	SC		20	80						0.1						E.O.H
C97PT12	0	1	CL	QMS	QV	HM	RDBN	HW	D	100	SC	5		35					60					CL	60	OPEN HOLE
C97PT12	1	2	QMS	QV	CL		BNGY	MW	D	20	SC	5		90					30					CL	5	OPEN HOLE
C97PT12	2	3	QMS	QV	CL		BNGY	MW	D	100	SC	5		90					30					CL	5	OPEN HOLE

Hole	Fm	To	Maj	Min1	Min2	Alter	Col	Wth	H2O	Ret	Texture	Qtz	BMS	QMS	CHT	SI	GW	SH	Lim	Py	AsPy	Oth Sulph	Per	Oth Min	Per	Comments
97PT12	3	4	QMS	QV	CL		BNGY	MW	D	100	SC	5		90					30					CL	5	OPEN HOLE
97PT12	4	5	QMS	CL			GYBN	SW	D	100	SC			95					20					CL	5	
97PT12	5	6	QMS	CL			OGBN	SW	D	100	SC			90					20					CL	10	
97PT12	6	7	QMS	QV	CL		GYOG	SW	D	100	SC	5		90					10					CL	5	
97PT12	7	8	QV	QMS		HM	GYOG	SW	D	100	SC	80		20					5					CL	0.1	
97PT12	8	9	QV	QMS		HM	GYOG	SW	D	100	SC	70		30					5					CL	0.1	
97PT12	9	10	QV	QMS		HM	GYOG	SW	D	100	SC	70		30					5					CL	0.1	
97PT12	10	11	QV	QMS			GYOG	SW	D	100	SC	70		30					10					CL	0.1	
97PT12	11	12	QMS	QV			GYBN	SW	D	100	SC	20		80					2					CL	0.1	
97PT12	12	13	QMS	QV			GYBN	SW	D	100	SC	5		95					1					CL	0.1	
97PT12	13	14	QMS	QV			GYBN	SW	D	100	SC	5		95					2							
97PT12	14	15	QMS				GY	SW	D	100	SC			100					1							
97PT12	15	16	QMS				GY	SW	D	100	SC			100					1							
97PT12	16	17	QMS				GY	SW	D	100	SC			100					1							
97PT12	17	18	QMS	BMS			GY	SW	D	100	SC		20	80					1							
97PT12	18	19	QMS	BMS			GY	SW	D	100	SC	0.1	10	90					1	0.1						
97PT12	19	20	QMS	GR	QV	SE	GYPK	SW	D	100	SC	5		90					0.1	0.1				GR	5	
97PT12	20	21	QMS				GY	SW	D	100	SC			100					0.1	0.1						
97PT12	21	22	QMS	BMS			GY	FR	B	100	SC	0.1	20	80						0.1						WATER TABLE
97PT12	22	23	QMS	QV		SE	GYGN	FR	B	100	SC	10		90						0.1	0.1					
97PT12	23	24	QMS	QV		SE	GYGN	FR	B	100	SC	10		90						0.1	0.1					
97PT12	24	25	QMS	QV		SE	GY	FR	B	100	SC	2		98						0.1						
97PT12	25	26	QMS	QV		SE	GY	FR	B	100	SC	1		99						0.1						

Hole	Fm	To	Maj	Min1	Min2	Alter	Col	Wth	H2O	Ret	Texture	Qtz	BMS	QMS	CHT	SI	GW	SH	Lim	Py	AsPy	Oth Sulph	Per	Oth Min	Per	Comments
C97PT12	26	27	QMS	QV		SE	GY	FR	B	100	SC	1		99						0.1						
C97PT12	27	28	QMS	QV		SE	GY	FR	B	100	SC	1		99						0.1						
C97PT12	28	29	QMS	CH		SE	GY	FR	B	100	SC			95	5					0.1						
C97PT12	29	30	QMS	CH		SEKS	GNPK	FR	B	100	SC			70	30					0.1	0.1					
C97PT12	30	31	QMS	QV		SEKS	GY	FR	B	100	SC	10		90						0.1						
C97PT12	31	32	QMS	BMS		SE	GY	FR	B	100	SC	0.1	20	80						0.1						
C97PT12	32	33	QMS	QV		SE	GY	FR	B	100	SC	5		95						0.1						
C97PT12	33	34	QMS	BMS		SE	GY	FR	B	100	SC		20	80						0.5	0.1					
C97PT12	34	35	QMS	BMS	QV		GY	FR	B	100	SC	5	15	80						0.1						
C97PT12	35	36	QMS	BMS	QV	KS	GY	FR	B	100	SC	5	15	80						0.1						
C97PT12	36	37	QMS	BMS	QV	KS	GY	FR	B	100	SC	5	15	80						0.1						
C97PT12	37	38	QMS	BMS	QV	SE	GY	FR	B	100	SC	5	35	60						0.1						
C97PT12	38	39	QMS	GR		SE	GY	FR	B	100	SC	0.1		80						0.1			GR		20	
C97PT12	39	40	BMS	QMS	CH	SEKS	GY	FR	B	100	SC		70	20	10					0.1						
C97PT12	40	41	BMS	QMS	CH	SE	GYGN	FR	B	100	SC	0.1	70	20	10					0.1						
C97PT12	41	42	QMS	BMS		SE	GY	FR	B	100	SC		20	80						0.1						
C97PT12	42	43	BMS	QMS	CH	SE	GY	FR	B	100	SC	0.1	90	5	5					0.1						
C97PT12	43	44	BMS	QMS		SE	GY	FR	B	100	SC		60	40	0.1					0.1						
C97PT12	44	45	BMS	QMS		SE	GY	FR	B	100	SC		60	40	0.1					0.1						
C97PT12	45	46	BMS	QMS		SE	GY	FR	B	100	SC		60	40	0.1					0.1						
C97PT12	46	47	BMS	QMS		SE	GY	FR	B	100	SC		90	10						0.1						
C97PT12	47	48	QMS	BMS	QV	KS	GY	FR	B	100	SC	1	29	70												
C97PT12	48	49	QMS	BMS	QV	KS	GY	FR	B	100	SC	1	29	70												

Hole	Fm	To	Maj	Min1	Min2	Alter	Col	Wth	H2O	Ret	Texture	Qtz	BMS	QMS	CHT	SI	GW	SH	Lim	Py	AsPy	Oth Sulph	Per	Oth Min	Per	Comments
RC97PT12	49	50	QMS	CH		SE	GY	FR	B	100	SC			80	20											
RC97PT12	50	51	QMS	CH		SE	GY	FR	B	100	SC			80	20					0.5						
RC97PT12	51	52	BMS	QMS	QV	SEKS	GYWHGN	FR	B	100	SC	8	80	10	2					0.1						
RC97PT12	52	53	QMS	BMS	CH	SE	GY	FR	B	100	SC	0.1	25	70	5					0.1						
RC97PT12	53	54	QMS	CH		SE	GYGN	FR	B	100	SC			80	20					0.1						
RC97PT12	54	55	QMS			SEKS	GYGNPK	FR	B	100	SC			100						0.1						
RC97PT12	55	56	QMS			SE	GY	FR	B	100	SC			100						0.1						
RC97PT12	56	57	QMS			SE	GY	FR	B	100	SC			95	5					0.1						
RC97PT12	57	58	BMS	QMS			GY	FR	B	100	SC		80	20												
RC97PT12	58	59	QMS	CH		SE	GY	FR	B	100	SC	0.1		99	1					0.1						
RC97PT12	59	60	QMS			SE	GY	FR	B	100	SC			100						0.1						
RC97PT12	60	61	QMS				GY	FR	B	100	SC			100	0.1											
RC97PT12	61	62	QMS	QV			GY	FR	B	100	SC	5		95						0.1						
RC97PT12	62	63	QMS	QV			GY	FR	B	100	SC	5		95						0.5						
RC97PT12	63	64	QMS				GY	FR	B	100	SC			100												
RC97PT12	64	65	QMS				GY	FR	B	100	SC			100												
RC97PT12	65	66	QMS	BMS			GY	FR	B	100	SC		40	60												
RC97PT12	66	67	QMS	BMS			GY	FR	B	100	SC		40	60												
RC97PT12	67	68	QMS	BMS			GY	FR	B	100	SC		40	60												
RC97PT12	68	69	QMS	BMS	CH	SE	GY	FR	B	100	SC		39	60	1											
RC97PT12	69	70	BMS	QMS			GY	FR	B	100	SC		80	20												
RC97PT12	70	71	QMS	QV		KS	GY	FR	B	100	SC	2		98												
RC97PT12	71	72	QMS	GR	QV		GY	FR	B	100	SC	2		90										GR	8	

Hole	Fm	To	Maj	Min1	Min2	Alter	Col	Wth	H2O	Ret	Texture	Qtz	BMS	QMS	CHT	SI	GW	SH	Lim	Py	AsPy	Oth Sulph	Per	Oth Min	Per	Comments
97PT12	72	73	QMS	GR	QV		GY	FR	B	100	SC	2		90										GR	8	
97PT12	73	74	QMS				GY	FR	B	100	SC			99										GR	1	
97PT12	74	75	QMS				GY	FR	B	100	SC			100												
97PT12	75	76	QMS	GR			GYPK	FR	B	100	SC			95										GR	5	
97PT12	76	77	QMS	GR	QV	SEKS	GYPK	FR	B	100	SC	5		80										GR	15	
97PT12	77	78	QMS	GR	QV	SEKS	GYPK	FR	B	100	SC	5		70										GR	25	
97PT12	78	79	QMS	GR	QV	SE	GYPK	FR	B	100	SC	5		85										GR	10	
97PT12	79	80	GR	QMS		KS	PK	FR	B	100	EQ			2										GR	98	
97PT12	80	81	GR	QMS		KS	GYPK	FR	B	100	SC	0.1		50										GR	50	
97PT12	81	82	GR	QMS	QV	KS	PKGY	FR	B	100	EQ	5		5						0.1				GR	90	
97PT12	82	83	QMS	GR		KS	GYPK	FR	B	100	SC			90										GR	10	
97PT12	83	84	QMS	GR		KSSE	GYPK	FR	B	100	SC			80	0.1									GR	20	
97PT12	84	85	QMS	BMS	CH	KSSE	GY	FR	B	100	SC		26	70	2									GR	2	
97PT12	85	86	QMS	BMS		KSSE	GY	FR	B	100	SC		9	90										GR	1	
97PT12	86	87	QMS	BMS		KSSE	GY	FR	B	100	SC	1	8	90										GR	1	
97PT12	87	88	BMS	QMS	CH	KSSE	GY	FR	B	100	SC		88	10	1									GR	1	
97PT12	88	89	BMS	QMS	CH	SE	GY	FR	B	100	SC		95	4	1											
97PT12	89	90	QMS	BMS			GY	FR	B	100	SC	0.1	40	60	0.1											
97PT12	90	91	QMS	QV	CH	SE	GY	FR	B	100	SC	10		90	0.1											
97PT12	91	92	QV	QMS	GR	SE	WHGYPK	FR	B	100	IB	75		20						0.1				GR	5	
97PT12	92	93	QMS				GY	FR	B	100	SC	0.1		100						0.1						
97PT12	93	94	QMS				GY	FR	B	100	SC	0.1		100						0.1						
97PT12	94	95	QMS			SEKS	GY	FR	B	100	SC			100												

Hole	Fm	To	Maj	Min1	Min2	Alter	Col	Wth	H2O	Ret	Texture	Qtz	BMS	QMS	CHT	SI	GW	SH	Lim	Py	AsPy	Oth Sulph	Per	Oth Min	Per	Comments
:C97PT12	95	96	QMS	BMS	CH	SEKS	GY	FR	B	100	SC		27	70	3											
C97PT12	96	97	QMS	BMS	CH	KS	GY	FR	B	100	SC		17	80	3											
:C97PT12	97	98	QMS	GR	QV	KS	GYPK	FR	B	100	SC	2		80										GR	18	
:C97PT12	98	99	QMS			SE	GY	FR	B	100	SC			100												
:C97PT12	99	100	QMS	BMS		SE	GYGN	FR	B	100	SC		30	70												
:C97PT12	100	101	QMS	CH		SE	GY	FR	B	100	SC			98	2											
:C97PT12	101	102	QMS	CH		SE	GY	FR	B	100	SC			98	2					0.1						
.C97PT12	102	103	QMS			SE	GY	FR	B	100	SC			100	0.1											
.C97PT12	103	104	QMS	GR		SE	GY	FR	B	100	SC			50										GR	50	
:C97PT12	104	105	GR	QMS		SE	PKGN	FR	B	100	EQ			1										GR	99	
:C97PT12	105	106	GR	QMS		SE	PKGN	FR	B	100	EQ			1										GR	99	E.O.H.
.C97PT13	0	1	CL	QMS		HM	RDBN	HW	D	50	SC			40					60					CL	60	OPEN HOLE
.C97PT13	1	2	CL	QMS		HM	TNRDBN	HW	D	50	SC			50					50					CL	50	OPEN HOLE
:C97PT13	2	3	QMS	CL		HM	TNRDBN	HW	D	100	SC			70					50					CL	30	OPEN HOLE
:C97PT13	3	4	QMS	CL			GYGNBN	MW	D	100	SC			90					20					CL	9	OPEN HOLE
:C97PT13	4	5	QMS	BMS			GYOGBN	SW	D	100	SC		30	70					10					CL	0.1	
.C97PT13	5	6	QMS	BMS	QV		GYBN	SW	D	100	SC	0.1	40	60					5					CL	0.1	
.C97PT13	6	7	QMS	BMS	QV		GYBN	SW	D	100	SC	1	39	60					5					CL	0.1	
:C97PT13	7	8	QMS	BMS	QV		GYBN	SW	D	100	SC	1	9	90					5					CL	0.1	
:C97PT13	8	9	QMS				GYTN	SW	D	100	SC			100					2							
:C97PT13	9	10	QMS	QV			GYTN	SW	D	100	SC	1		99					2							
:C97PT13	10	11	QMS	QV		HM	GYBN	SW	D	100	SC	1		99					2							
.C97PT13	11	12	QMS	QV		HM	GYBN	SW	D	100	SC	1		99					2							

Hole	Fm	To	Maj	Min1	Min2	Alter	Col	Wth	H2O	Ret	Texture	Qtz	BMS	QMS	CHT	SI	GW	SH	Lim	Py	AsPy	Oth Sulph	Per	Oth Min	Per	Comments
97PT13	12	13	QMS	BMS		HM	GYBN	SW	D	100	SC		10	90					2							
97PT13	13	14	QMS	BMS	QV	HM	GYBN	SW	D	100	SC	5	10	85					2							
97PT13	14	15	QMS	BMS	QV	HM	GYBN	SW	D	100	SC	5	10	85					2							
97PT13	15	16	QMS				GYBN	SW	D	100	SC			100					2							
97PT13	16	17	QMS				GY	SW	D	100	SC	0.1		100	0.1				1							
97PT13	17	18	QMS				GY	SW	D	100	SC	0.1		95	5				1							
97PT13	18	19	QMS	BMS			GY	SW	D	100	SC		25	70	5				1	0.1						
97PT13	19	20	QMS	BMS			GY	SW	B	100	SC		25	70					0.1	0.1						WATER TABLE
97PT13	20	21	QMS				GY	FR	B	100	SC	0.1		100						0.1						
97PT13	21	22	QMS	CH			LtGY	FR	B	100	SC			90	10					0.5	0.1					
97PT13	22	23	QMS	BMS	CH		GY	FR	B	100	SC	0.1	20	70	10					0.1						
97PT13	23	24	QMS				GY	FR	B	100	SC			100	0.1					0.1						
97PT13	24	25	QMS	BMS			GY	FR	B	100	SC		10	90						0.1						
97PT13	25	26	BMS	QMS	CH	SE	GY	FR	B	100	SC		75	20	5					0.1						
97PT13	26	27	BMS	QMS	CH	SEKS	GY	FR	B	100	SC		75	20	5											
97PT13	27	28	QMS	BMS			GY	FR	B	100	SC		30	70												
97PT13	28	29	QMS	QV			GY	FR	B	100	SC	5		95												
97PT13	29	30	QMS	CH		SE	GY	FR	B	100	SC			95	5											
97PT13	30	31	QMS			SE	GY	FR	B	100	SC	3		95	2											
97PT13	31	32	QMS				GY	FR	B	100	SC			100												
97PT13	32	33	QMS			KS	GY	FR	B	100	SC			99	1											
97PT13	33	34	QMS	QV		KSSE	GY	FR	B	100	SC	5		95												
97PT13	34	35	QMS				GY	FR	B	100	SC			100												

Hole	Fm	To	Maj	Min1	Min2	Alter	Col	Wth	H2O	Ret	Texture	Qtz	BMS	QMS	CHT	SI	GW	SH	Lim	Py	AsPy	Oth Sulph	Per	Oth Min	Per	Comments
C97PT13	35	36	QMS	CH		KS	GY	FR	B	100	SC			99	1											
C97PT13	36	37	QMS	GR	QV	KS	GYPK	FR	B	100	SC	1		90										GR	9	
C97PT13	37	38	QMS	QV			GY	FR	B	100	SC	1		99												
C97PT13	38	39	QMS	CH		SE	GYGN	FR	B	100	SC			80	20											
C97PT13	39	40																								
C97PT13	40	41	BMS	QMS	CH	KS	GY	FR	B	100	SC		75	20	5											
C97PT13	41	42	QMS	BMS			GY	FR	B	100	SC	1	19	80						0.1						
C97PT13	42	43	QMS	QV	CH		GY	FR	B	100	SC	5		90	5					0.1						
C97PT13	43	44	QMS	QV			GY	FR	B	100	SC	1		98	1											
C97PT13	44	45	QMS	BMS			GY	FR	B	100	SC		20	80	0.1											
C97PT13	45	46	QMS	BMS			GY	FR	B	100	SC		30	70	0.1					0.1						
C97PT13	46	47	QMS				GY	FR	B	100	SC			100						0.5						
C97PT13	47	48	QMS	CH		SE	GYGN	FR	B	100	SC			90	10					0.1						
C97PT13	48	49	QMS	BMS			GY	FR	B	100	SC		10	90												
C97PT13	49	50	QMS				GY	FR	B	100	SC			100						0.1						
C97PT13	50	51	QMS	BMS			GY	FR	B	100	SC		30	70						0.1						
C97PT13	51	52	QMS	BMS			GY	FR	B	100	SC		40	60						0.1						
C97PT13	52	53	QMS	BMS	CH	SE	GY	FR	B	100	SC		40	55	5					0.1						
C97PT13	53	54	QMS	BMS	CH	SE	GY	FR	B	100	SC	5	40	50	5					0.1						
C97PT13	54	55	QMS	BMS	CH	SI	GY	FR	B	100	SC	5	20	70	5					0.5						
C97PT13	55	56	BMS	QMS			GY	FR	B	100	SC	0.1	70	30						0.5						
C97PT13	56	57	BMS	QMS			GY	FR	B	100	SC	0.1	70	30						0.1						
C97PT13	57	58	BMS	QMS			GY	FR	B	100	SC		80	20						0.1						

Hole	Fm	To	Maj	Min1	Min2	Alter	Col	Wth	H2O	Ret	Texture	Qtz	BMS	QMS	CHT	SI	GW	SH	Lim	Py	AsPy	Oth Sulph	Per	Oth Min	Per	Comments
RC97PT13	58	59	QMS				GY	FR	B	100	SC			100						0.1						
RC97PT13	59	60	QMS	BMS			GY	FR	B	100	SC		10	90						0.1						
RC97PT13	60	61	QMS	BMS			GY	FR	B	100	SC		30	70												
RC97PT13	61	62	QMS	BMS			GY	FR	B	100	SC		20	80						0.1						
RC97PT13	62	63	QMS	BMS			GY	FR	B	100	SC		20	80						0.1						
RC97PT13	63	64	BMS	QMS	CH	SE	GYGN	FR	B	100	SC		70	20	10					0.1						
RC97PT13	64	65	QMS	BMS			GY	FR	B	100	SC		30	70						0.1						
RC97PT13	65	66	QMS			SE	GY	FR	B	100	SC			99	1					0.5						
RC97PT13	66	67	QMS			SE	GY	FR	B	100	SC			99	1					0.5						
RC97PT13	67	68	QMS				GY	FR	B	100	SC			100						0.5						
RC97PT13	68	69	QMS				GY	FR	B	100	SC			100						0.1						
RC97PT13	69	70	QMS			SE	GY	FR	B	100	SC			100						0.1						
RC97PT13	70	71	QMS	QV	CH	SE	GY	FR	B	100	SC	3		95	2					0.5						
RC97PT13	71	72	QMS	QV	CH	SE	GY	FR	B	100	SC	1		98	1											
RC97PT13	72	73	QMS	CH		SE	GYGN	FR	B	100	SC			95	5					0.1						
RC97PT13	73	74	QMS			SE	GYGN	FR	B	100	SC			100						0.5						
RC97PT13	74	75	QMS	CH		SE	GY	FR	B	100	SC			98	2					0.1						
RC97PT13	75	76	QMS			SE	GY	FR	B	100	SC			100						0.1						
RC97PT13	76	77	QMS			SE	GY	FR	B	100	SC	1		98	1					0.1						
RC97PT13	77	78	QMS	BMS			GY	FR	B	100	SC	0.1	40	60						0.1						
RC97PT13	78	79	QMS	BMS		SE	GY	FR	B	100	SC		40	60	0.1					0.1						
RC97PT13	79	80	QMS				GY	FR	B	100	SC			100						0.1						
RC97PT13	80	81	QMS			SE	GY	FR	B	100	SC	0.1		100	0.1					0.1						

Hole	Fm	To	Maj	Min1	Min2	Alter	Col	Wth	H2O	Ret	Texture	Qtz	BMS	QMS	CHT	SI	GW	SH	Lim	Py	AsPy	Oth Sulph	Per	Oth Min	Per	Comments
C97PT13	81	82	QMS			SE	GY	FR	B	100	SC	0.1		100	0.1					0.1						
C97PT13	82	83	QMS			SE	GY	FR	B	100	SC	0.1		100	0.1					0.1						
C97PT13	83	84	QMS			SE	GY	FR	B	100	SC	0.1		100	0.1					0.1						
C97PT13	84	85	QMS				GY	FR	B	100	SC			100	0.1											
C97PT13	85	86	QMS				GY	FR	B	100	SC	0.1		99						1						
C97PT13	86	87	QMS			SE	GYGN	FR	B	100	SC	1		98	1					0.1						
C97PT13	87	88	QMS	GR	CH	SEKS	GYGNPK	FR	B	100	SC			90	2					0.1				GR	8	
C97PT13	88	89	QMS	CH		SE	GY	FR	B	100	SC			95	5					0.1						
C97PT13	89	90	QMS	CH		SE	GY	FR	B	100	SC			95	5					0.1						
C97PT13	90	91	QMS	CH		SE	GY	FR	B	100	SC			95	5					0.1						
C97PT13	91	92	QMS				GY	FR	B	100	SC			100												
C97PT13	92	93	QMS				GY	FR	B	100	SC	0.1		100	0.1					0.1	0.1					
C97PT13	93	94	QMS				GY	FR	B	100	SC	0.1		100	0.1					0.1						
C97PT13	94	95	QMS	QV			GY	FR	B	100	SC	1		99												
C97PT13	95	96	QMS	QV			GY	FR	B	100	SC	1		99												
C97PT13	96	97	BMS	QMS	CH	SE	GYGN	FR	B	100	SC	0.1	75	20	5											
C97PT13	97	98	BMS	QMS	CH	SE	GYGN	FR	B	100	SC	5	70	20	5					0.1						
C97PT13	98	99	BMS	QMS	CH	SE	GYGN	FR	B	100	SC	5	70	20	5					0.1						
C97PT13	99	100	QMS	QV			GY	FR	B	100	SC	5		95												E.O.H.
C97PT14	0	1	QMS	QV			GYBN	MW	D	90	SC	5		95					20					CL	0.1	OPEN HOLE
C97PT14	1	2	QMS				GYBN	SW	D	50	SC	0.1		100					10	0.1				CL	0.1	OPEN HOLE
C97PT14	2	3	QMS				GYBN	SW	D	50	SC	0.1		100					5	0.1				CL	0.1	OPEN HOLE
C97PT14	3	4	QMS				GYBN	SW	D	120	SC			100					2							OPEN HOLE

Hole	Fm	To	Maj	Min1	Min2	Alter	Col	Wth	H2O	Ret	Texture	Qtz	BMS	QMS	CHT	SI	GW	SH	Lim	Py	AsPy	Oth Sulph	Per	Oth Min	Per	Comments
97PT14	4	5	QMS			IIM	GYBN	SW	D	100	SC	0.1		100					2							
97PT14	5	6	QMS			IIM	GYBN	SW	D	100	SC	5		95					2							
97PT14	6	7	QMS				BN	SW	D	100	SC	0.1		100					2					CL	0.1	
97PT14	7	8	QMS				BN	SW	D	100	SC	0.1		100					2					CL	0.1	
97PT14	8	9	QMS				BN	SW	D	100	SC			100					2							
97PT14	9	10	QMS				BN	SW	D	100	SC			100					2							
97PT14	10	11	QMS				BN	SW	D	100	SC	0.1		100					2							
97PT14	11	12	QMS				BN	SW	D	100	SC			100					2							
97PT14	12	13	QMS	QV			PKBN	SW	D	100	SC	20		80					2							
97PT14	13	14	QMS				BN	SW	D	100	SC			100					10							
97PT14	14	15	QMS				BN	SW	D	100	SC			100					10							
97PT14	15	16	QMS				BN	SW	D	100	SC			100					10							
97PT14	16	17	QMS	QV			GY	SW	D	100	SC	2		98					0.1							
97PT14	17	18	QMS				GY	SW	D	100	SC			100					2							
97PT14	18	19	BMS	QMS			GY	SW	D	100	SC	0.1	80	20					2							
97PT14	19	20	QMS	BMS			GY	SW	D	100	SC	0.1	10	90					0.1							
97PT14	20	21	BMS	QMS	QV		GY	FR	D	100	SC	5	80	15						0.5						
97PT14	21	22	QMS	BMS	QV		GY	FR	D	100	SC	5	25	70						0.1						
97PT14	22	23	GR				PKGY	FR	D	100	EQ			0.1										GR	100	
97PT14	23	24	GR				PKGY	FR	D	100	EQ													GR	100	
97PT14	24	25	GR				PK	FR	D	100	EQ													GR	100	
97PT14	25	26	GR			SE	PK	FR	D	100	EQ	0.1												GR	100	
97PT14	26	27	GR			SE	PK	FR	D	100	EQ	0.1												GR	100	

Hole	Fm	To	Maj	Min1	Min2	Alter	Col	Wth	H2O	Ret	Texture	Qtz	BMS	QMS	CHT	SI	GW	SH	Lim	Py	AsPy	Oth Sulph	Per	Oth Min	Per	Comments
97PT14	27	28	GR			SE	PK	FR	D	100	EQ	0.1												GR	100	
97PT14	28	29	GR	QV		SE	PK	FR	D	100	EQ	1												GR	99	
97PT14	29	30	GR	QV		SE	PK	FR	D	100	EQ	1												GR	99	
97PT14	30	31	GR			SE	PK	FR	D	100	EQ	0.1												GR	100	
97PT14	31	32	QMS	GR	QV		GYPK	FR	D	100	SC	1		80										GR	19	
97PT14	32	33	BMS				GY	FR	D	100	SC		100													
97PT14	33	34	BMS	QMS	CH		GY	FR	B	100	SC		80	18	2											WATER TABLE
97PT14	34	35	BMS				GY	FR	B	100	SC		100		0.1											
97PT14	35	36	BMS	QMS	QV	SI	GY	FR	B	100	SC	1	70	29												
97PT14	36	37	QMS				GY	FR	B	100	SC			100												
97PT14	37	38	QMS	GR	QV		GYPK	FR	B	100	SC	5		90						0.1				GR	5	
97PT14	38	39	QMS	GR	QV		GYPK	FR	B	100	SC	2		95						0.1				GR	3	
97PT14	39	40	QMS	BMS			GY	FR	B	100	SC		20	80												
97PT14	40	41	BMS	QMS			GY	FR	B	100	SC		80	20						0.1						
97PT14	41	42	BMS	QMS		SI	GY	FR	B	100	SC		80	20						0.1						
97PT14	42	43	BMS	QMS		SI	GY	FR	B	100	SC	0.1	80	20						0.1						
97PT14	43	44	QMS	BMS	QV	SE	GY	FR	B	100	SC	5	35	60						0.1						
97PT14	44	45	QMS	CH		SE	GYGN	FR	B	100	SC			80	20											
97PT14	45	46	QMS	CH		SI	GY	FR	B	100	SC			95	5											
97PT14	46	47	QMS	CH		SI	GY	FR	B	100	SC			95	5											
97PT14	47	48	QMS	CH		SE	GY	FR	B	100	SC			98	2					0.1						
97PT14	48	49	QMS	CH		SE	GYGN	FR	B	100	SC			95	5					0.1						
97PT14	49	50	QMS	CH		SI	GYGN	FR	B	100	SC			95	5					0.1						

Hole	Fm	To	Maj	Min1	Min2	Alter	Col	Wth	H2O	Ret	Texture	Qtz	BMS	QMS	CHT	SI	GW	SH	Lim	Py	AsPy	Oth Sulph	Per	Oth Min	Per	Comments
C97PT14	50	51	QMS	QV	CH	SE	GYWHGN	FR	B	100	SC	10		85	5					0.1						
C97PT14	51	52	QMS	QV	CH	SE	GYWHGN	FR	B	100	SC	10		85	5					0.1						
C97PT14	52	53	QMS	GR		SE	GYGN	FR	B	100	SC			70										GR	30	
C97PT14	53	54	GR			SE	GYGN	FR	B	100	EQ													GR	100	
C97PT14	54	55	GR	QMS		SE	GYGN	FR	B	100	SC			40										GR	60	
C97PT14	55	56	QMS	GR	QV	SE	GY	FR	B	100	SC	5		90										GR	5	
C97PT14	56	57	QMS	GR	QV	SE	GY	FR	B	100	SC	5		90										GR	5	
C97PT14	57	58	QMS	GR	QV	SE	GYGN	FR	B	100	SC	5		85										GR	10	
C97PT14	58	59	GR			SE	LTGNGY	FR	B	100	EQ			0.1										GR	100	
C97PT14	59	60	GR			SE	LTGNGY	FR	B	100	EQ			0.1										GR	100	
C97PT14	60	61	GR			SE	LTGNGY	FR	B	100	EQ			0.1										GR	100	
C97PT14	61	62	QMS	GR		SE	GY	FR	B	100	SC			95										GR	5	
C97PT14	62	63	QMS	GR		SE	GY	FR	B	100	SC	0.1		95										GR	5	
C97PT14	63	64	QMS	GR		SE	GY	FR	B	100	SC	0.1		95										GR	5	
C97PT14	64	65	QMS			SE	GY	FR	B	100	SC			100										GR	0.1	
C97PT14	65	66	QMS			SE	GYGN	FR	B	100	SC			100						0.1						
C97PT14	66	67	QMS			SE	GY	FR	B	100	SC			100						0.1						
C97PT14	67	68	QMS			SE	GY	FR	B	100	SC			100						0.1						
C97PT14	68	69	QMS			SE	GY	FR	B	100	SC			100						0.1						
C97PT14	69	70	QMS			SE	GY	FR	B	100	SC			100						0.1						
C97PT14	70	71	QMS			SE	GY	FR	B	100	SC			100												
C97PT14	71	72	QMS				GY	FR	B	100	SC			100												
C97PT14	72	73	QMS				GY	FR	B	100	SC			100						0.1						

Hole	Fm	To	Maj	Min1	Min2	Alter	Col	Wth	H2O	Ret	Texture	Qtz	BMS	QMS	CHT	SI	GW	SH	Lim	Py	AsPy	Oth Sulph	Per	Oth Min	Per	Comments
RC97PT14	73	74	QMS			SE	GY	FR	B	100	SC			100						0.1						
RC97PT14	74	75	QMS			SE	GY	FR	B	100	SC	0.1		100						0.1						
RC97PT14	75	76	QMS			SE	GYLTGN	FR	B	100	SC			100												
RC97PT14	76	77	BMS	QMS	QV		GY	FR	B	100	SC	5	65	30						0.1						
RC97PT14	77	78	QMS	BMS		GP	GY	FR	B	100	SC		20	80						0.1						
RC97PT14	78	79	QMS			GP	GY	FR	B	100	SC			100						0.1						
RC97PT14	79	80	QMS	BMS		GP	GY	FR	B	100	SC		49	50						1						
RC97PT14	80	81	QMS	BMS		GP	GY	FR	B	100	SC		50	50						0.5						
RC97PT14	81	82	BMS	QMS		GP	GY	FR	B	100	SC		80	20						0.1						
RC97PT14	82	83	BMS	QMS		GP	GY	FR	B	100	SC	1	79	20						0.1						
RC97PT14	83	84	QMS	BMS		SLGP	GY	FR	B	100	SC		20	80						0.1						
RC97PT14	84	85	QMS			SLGP	GY	FR	B	100	SC			100						0.1						
RC97PT14	85	86	QMS			SLGP	GY	FR	B	100	SC			99						1						
RC97PT14	86	87	QMS	GR		SE	GYLTGN	FR	B	100	SC			95						0.1				GR	5	
RC97PT14	87	88	BMS	QMS			GY	FR	B	100	SC	1	59	40						0.1						
RC97PT14	88	89	QMS	QV			GY	FR	B	100	SC	2		98						0.1						
RC97PT14	89	90	BMS	QMS			GY	FR	B	100	SC	1	59	40						0.1						
RC97PT14	90	91	QMS	BMS	QV	SE	GY	FR	B	100	SC	5	25	70						0.1						
RC97PT14	91	92	QMS	CH	QV	SE	GY	FR	B	100	SC	3		95	2											
RC97PT14	92	93	QMS	CH	QV	SE	GYGN	FR	B	100	SC	2		60	38											
RC97PT14	93	94	BMS	CH		SE	GYGN	FR	B	100	SC		70		30					0.1						
RC97PT14	94	95	BMS	QMS	CH	SE	GY	FR	B	100	SC	2	70	23	5											
RC97PT14	95	96	BMS	QMS	CH	SE	GYGN	FR	B	100	SC	1	80	14	5											

Hole	Fm	To	Maj	Min1	Min2	Alter	Col	Wth	H2O	Ret	Texture	Qtz	BMS	QMS	CHT	SI	GW	SH	Lim	Py	AsPy	Oth Sulph	Per	Oth Min	Per	Comments
97PT14	96	97	QMS	BMS	QV	SE	GY	FR	B	100	SC	0.1	35	60	5					0.1						
97PT14	97	98	QMS	QV		SE	GY	FR	B	100	SC	5		95						0.1						
97PT14	98	99	QMS	CH	QV	SE	GY	FR	B	100	SC	1		94	5					0.1						
97PT14	99	100	QMS				GY	FR	B	100	SC	0.1		100												E.O.H.
97PT15	0	1	QMS	QV	CH		OGBN	MW	D	20	SC	15		80	5				40					CL	0.1	OPEN HOLE
97PT15	1	2	QMS	QV	CL	HM	RDGYBN	MW	D	80	SC	5		90					40					CL	5	OPEN HOLE
97PT15	2	3	QMS	CL		HM	RDBN	MW	D	100	SC			95					20					CL	5	OPEN HOLE
97PT15	3	4	QMS	QV	CL	HM	RDBN	SW	D	100	SC	5		90					10					CL	5	OPEN HOLE
97PT15	4	5	BMS	QMS	QV	HM	BNKK	SW	D	50	SC	5	64	30					10					CL	1	
97PT15	5	6	BMS	QMS	QV	HM	BNKK	SW	D	50	SC	5	64	30					5					CL	1	
97PT15	6	7	QMS	BMS			GYKK	SW	D	100	SC		10	90					2							
97PT15	7	8	QMS	BMS			GYKK	SW	D	100	SC		10	90					2							
97PT15	8	9	BMS	QMS	CL	GNCL	GYYEGN	SW	D	100	SC		70	20					5					CL	10	
97PT15	9	10	BMS	QMS	QV	HM	KKGYBN	SW	D	100	SC	20	60	20					5							
97PT15	10	11	QMS	BMS		HM	GY	SW	D	100	SC		50	50					1	0.1						
97PT15	11	12	QV	QMS	BMS		GYOG	SW	D	100	SC	60	10	20					2					CL	10	
97PT15	12	13	QV	QMS	BMS	HM	GYBN	SW	D	100	SC	60	20	20					1					CL	0.1	
97PT15	13	14	QMS	BMS	QV	HM	GYKK	SW	D	100	SC	10	20	70					1	0.1						
97PT15	14	15	QMS	QV	BMS		GYKK	SW	D	100	SC	5	5	90					2	0.1						
97PT15	15	16	QMS	QV			GYOGBN	SW	D	100	SC	5		95					5							
97PT15	16	17	QMS				GYKK	SW	D	100	SC			100					3							
97PT15	17	18	QMS				GY	SW	D	100	SC			100					2							
97PT15	18	19	QMS				GY	SW	D	100	SC	0.1		100					1							

Hole	Fm	To	Maj	Min1	Min2	Alter	Col	Wth	H2O	Ret	Texture	Qtz	BMS	QMS	CHT	SI	GW	SH	Lim	Py	AsPy	Oth Sulph	Per	Oth Min	Per	Comments
C97PT15	19	20	QMS				GY	SW	D	100	SC	0.1		100					1							
C97PT15	20	21	QMS	BMS			GY	SW	D	100	SC	0.1	10	90					0.1	0.1						
C97PT15	21	22	QMS				GY	FR	D	100	SC	0.1		100						0.1						
C97PT15	22	23	QMS				GY	FR	D	100	SC			100	0.1					0.1						
C97PT15	23	24	QMS	GR		KS	GY	FR	D	100	SC			99										GR	1	
C97PT15	24	25	QMS	GR		KS	GY	FR	D	100	SC			95										GR	5	
C97PT15	25	26	QMS	GR		KS	GY	FR	D	100	SC			99						0.1				GR	1	
C97PT15	26	27	GR	QMS		KS	PKLTGY	FR	D	100	EQ			20						0.1				GR	80	
C97PT15	27	28	GR	QMS		KS	PKLTGY	FR	D	100	EQ			1										GR	99	
C97PT15	28	29	QMS	GR		KS	GY	FR	D	100	SC			95										GR	5	
C97PT15	29	30	QMS				GY	FR	D	100	SC			100												
C97PT15	30	31	QMS			SE	GY	FR	D	100	SC			100						0.1						
C97PT15	31	32	QMS	GR		SE KS	GY	FR	D	100	SC			95						0.1				GR	5	
C97PT15	32	33	QMS				GY	FR	D	100	SC			100						0.1						
C97PT15	33	34	QMS	QV		SE	GYGN	FR	D	100	SC	20		80						0.1						
C97PT15	34	35	QMS				GY	FR	D	100	SC			100						0.1						
C97PT15	35	36	QMS			SE	GY	FR	D	100	SC	0.1		100						0.1						
C97PT15	36	37	QMS			SE	GY	FR	D	100	SC	0.1		100	0.1					0.1						
C97PT15	37	38	QMS			SE	GY	FR	D	100	SC	0.1		100	0.1					0.1						
C97PT15	38	39	QMS			SE	GYGN	FR	D	100	SC	0.1		100	0.1					0.1						
C97PT15	39	40	QMS			SE	GYGN	FR	B	100	SC	0.1		100	0.1					0.1						WATER TABLE
C97PT15	40	41	QMS	QV		SE	GY	FR	B	100	SC	2		98	0.1					0.1						
C97PT15	41	42	QMS			SE	GY	FR	B	100	SC			100	0.1					0.1						

Hole	Fm	To	Maj	Min1	Min2	Alter	Col	Wth	H2O	Ret	Texture	Qtz	BMS	QMS	CHT	SI	GW	SH	Lim	Py	AsPy	Oth Sulph	Per	Oth Min	Per	Comments
97PT15	42	43	QMS	GR		SEKS	GYLTGN	FR	B	100	SC			90						0.1				GR	10	
97PT15	43	44	QMS			SE	GY	FR	B	100	SC	1		99						0.1						
97PT15	44	45	QMS			SEHM	GYRD	FR	B	100	SC			99						0.1				GR	1	
97PT15	45	46	QMS	BMS			GY	FR	B	100	SC		20	80												
97PT15	46	47	QMS	BMS		SEKS	GY	FR	B	100	SC	0.1	10	90												
97PT15	47	48	QMS	GR		SEKS	GY	FR	B	100	SC			90										GR	10	
97PT15	48	49	QMS	GR		SEKS	GYPKGN	FR	B	100	SC			60										GR	40	
97PT15	49	50	QMS	GR		SEKS	GYPKGN	FR	B	100	SC			55										GR	45	
97PT15	50	51	QMS	GR		SEKS	GYPKGN	FR	B	100	SC			55										GR	45	
97PT15	51	52	QMS				GY	FR	B	100	SC			100												
97PT15	52	53	QMS				GY	FR	B	100	SC			100												
97PT15	53	54	QMS				GY	FR	B	100	SC			100												
97PT15	54	55	QMS				GY	FR	B	100	SC			99										GR	1	
97PT15	55	56	GR	QMS	QV	KS	PKGY	FR	B	100	EQ	5		5										GR	90	
97PT15	56	57	GR	QV	QMS	KSSE	PKGY	FR	B	100	EQ	10		5										GR	85	
97PT15	57	58	GR	QV	QMS	KS	PKGY	FR	B	100	EQ	10		1										GR	89	
97PT15	58	59	GR	QV	QMS	KSSF	KKPK	FR	B	100	EQ	10		1										GR	89	
97PT15	59	60	QMS	QV	GR	KS	GYPK	FR	B	100	SC	5		90										GR	5	
97PT15	60	61	QMS	GR		KS	GY	FR	B	100	SC			98										GR	2	
97PT15	61	62	QMS	GR	QV	KS	GY	FR	B	100	SC	2		95						0.1				GR	3	
97PT15	62	63	QMS	GR	QV	KS	GY	FR	B	100	SC	2		95						0.1				GR	3	
97PT15	63	64	QMS				GY	FR	B	100	SC	0.1		100						0.1				GR	0.1	
97PT15	64	65	QMS	CH			GY	FR	B	100	SC			99	1											

Hole	Fm	To	Maj	Min1	Min2	Alter	Col	Wth	H2O	Ret	Texture	Qtz	BMS	QMS	CHT	SI	GW	SH	Lim	Py	AsPy	Oth Sulph	Per	Oth Min	Per	Comments
C97PT15	65	66	QMS			SE	GNGY	FR	B	100	SC			100												
C97PT15	66	67	QMS	QV		SE	GY	FR	B	100	SC	2		98												
C97PT15	67	68	QMS	QV		SE	GY	FR	B	100	SC	2		98												
C97PT15	68	69	QMS	QV		SE	GY	FR	B	100	SC	2		98						0.1						
C97PT15	69	70	QMS	QV		SE	GY	FR	B	100	SC	2		98						0.1						
C97PT15	70	71	QMS	BMS			GY	FR	B	100	SC		10	90						0.1						
C97PT15	71	72	QMS	CH	QV	SE	GY	FR	B	100	SC	2		95	3					0.1						
C97PT15	72	73	QMS	GR		SE	GYPKGN	FR	B	100	SC			80						0.1				GR	20	
C97PT15	73	74	QMS	QV		SE	GYGN	FR	B	100	SC	20		80						0.1						
C97PT15	74	75	QMS			SE	GYGN	FR	B	100	SC			100						0.1	0.1					
C97PT15	75	76	QMS			SE	GYGN	FR	B	100	SC			100						0.1						
C97PT15	76	77	QMS				GY	FR	B	100	SC	0.1		100												
C97PT15	77	78	QMS				GY	FR	B	100	SC	0.1		100												
C97PT15	78	79	QMS			SE	GYGN	FR	B	100	SC	0.1		100						0.1						
C97PT15	79	80	QMS			SE	GYGN	FR	B	100	SC	0.1		100												
C97PT15	80	81	GR	QMS		SE	LTGNGY	FR	B	100	EQ			40										GR	60	
C97PT15	81	82	GR			SE	WHGN	FR	B	100	EQ			0.1										GR	100	
C97PT15	82	83	GR			SE	WHGN	FR	B	100	EQ			0.1										GR	100	
C97PT15	83	84	GR			SE	WHGN	FR	B	100	EQ													GR	100	
C97PT15	84	85	QMS	GR		SE	GYGN	FR	B	100	SC			90										GR	10	
C97PT15	85	86	QMS	GR		SE	GYGN	FR	B	100	SC	0.1		95										GR	5	
C97PT15	86	87	QMS			SE	GYGN	FR	B	100	SC	1		98										GR	1	
C97PT15	87	88	QMS			SEKS	GYGN	FR	B	100	SC	1		98										GR	1	

Hole	Fm	To	Maj	Min1	Min2	Alter	Col	Wth	H2O	Ret	Texture	Qtz	BMS	QMS	CHT	SI	GW	SH	Lim	Py	AsPy	Oth Sulph	Per	Oth Min	Per	Comments
RC97PT15	88	89	QMS	QV		SE	GYGN	FR	B	100	SC	2		98												
RC97PT15	89	90	QMS			SE	GYGN	FR	B	100	SC			100												
RC97PT15	90	91	QMS			SE	GYGN	FR	B	100	SC			100												
RC97PT15	91	92	QMS			SE	GYGN	FR	B	100	SC			100												
RC97PT15	92	93	QMS			SE	GYGN	FR	B	100	SC			100	0.1											
RC97PT15	93	94	QMS			SE	GYGN	FR	B	100	SC			100												
RC97PT15	94	95	QMS			SE	GYGN	FR	B	100	SC			100												
RC97PT15	95	96	QMS			SE	GYGN	FR	B	100	SC			98	2											
RC97PT15	96	97	QMS			SE	GY	FR	B	100	SC	1		99												
RC97PT15	97	98	QMS				GY	FR	B	100	SC			100												
RC97PT15	98	99	QMS			SE	GY	FR	B	100	SC			100												
RC97PT15	99	100	QMS			SE	GYGN	FR	B	100	SC			100												E.O.H.
RC97PT16	0	1	CL	QMS	QV	HM	RDBN	HW	D	20	SC	10		40					50				CL		50	OPEN HOLE
RC97PT16	1	2	QMS			HM	BNGY	MW	D	50	SC			90					30				CL		10	OPEN HOLE
RC97PT16	2	3	QMS			HM	BNGY	MW	D	50	SC			90					30				CL		10	OPEN HOLE
RC97PT16	3	4	CL	QMS	QV		OGGYBN	MW	D	100	SC	5		45					40				CL		50	OPEN HOLE
RC97PT16	4	5	QMS			HM	GYBN	MW	D	100	SC	1		98					20				CL		1	
RC97PT16	5	6	QMS	CL			GYBN	SW	D	100	SC			95					10				CL		5	
RC97PT16	6	7	QMS	CL			GYBN	SW	D	100	SC			95					10				CL		5	
RC97PT16	7	8	QMS	CL	QV		GYBN	SW	D	100	SC	5		90					10				CL		5	
RC97PT16	8	9	QMS	CL			GYBN	SW	D	100	SC			95					10				CL		5	
RC97PT16	9	10	QMS	CL			GYBN	SW	D	100	SC	1		94					5				CL		5	
RC97PT16	10	11	QMS	CL			GYBN	SW	D	100	SC	1		94					5				CL		5	

Hole	Fm	To	Maj	Min1	Min2	Alter	Col	Wth	H2O	Ret	Texture	Qtz	BMS	QMS	CHT	SI	GW	SH	Lim	Py	AsPy	Oth Sulph	Per	Oth Min	Per	Comments
C97PT16	11	12	QMS	CL			GYBN	SW	D	100	SC	1		94					5					CL	5	
C97PT16	12	13	QMS	CL			GYBN	SW	D	100	SC	1		94					5					CL	5	
C97PT16	13	14	QMS			HM	GYBN	SW	D	100	SC			100					1							
C97PT16	14	15	QMS			HM	GYBN	SW	D	100	SC			100					1							
C97PT16	15	16	QMS			HM	GYBN	SW	D	100	SC			100					1							
C97PT16	16	17	QMS			HM	GYRDBN	SW	D	100	SC			100					3							
C97PT16	17	18	QMS			HM	GYRDBN	SW	D	100	SC			100					3							
C97PT16	18	19	QMS	QV		HM	GYBN	SW	D	100	SC	5		95					3							
C97PT16	19	20	QMS			HM	GYBN	SW	D	100	SC			100					3							
C97PT16	20	21	QMS			HM	GYBN	SW	D	100	SC			100					3							
C97PT16	21	22	QMS			HM	GYBN	SW	D	100	SC			100					2							
C97PT16	22	23	QMS	BMS	QV		GY	SW	D	100	SC	5	15	80					0.1	0.1						
C97PT16	23	24	BMS	QMS			GY	FR	D	100	SC		60	40						0.1						
C97PT16	24	25	BMS	QMS	CH	SE	GY	FR	D	100	SC		80	15	5					0.1						
C97PT16	25	26	QMS	CH		SE	GYGN	FR	D	100	SC			90	10					0.1	0.1					
C97PT16	26	27	QMS			SE	GYGN	FR	D	100	SC			99						1	0.1					
C97PT16	27	28	QMS			SE	GYGN	FR	D	100	SC			100						0.5	0.1					
C97PT16	28	29	QMS	BMS	QV	SE	GY	FR	B	100	SC	1	9	90						0.1						WATER TABLE
C97PT16	29	30	QMS	CH		SE	GY	FR	B	100	SC	0.1		95	5					0.1						
C97PT16	30	31	QMS			SE	GY	FR	B	100	SC			100						0.1						
C97PT16	31	32	QMS			SE	GYGN	FR	B	100	SC			100						0.1						
C97PT16	32	33	QMS	CH	QV	SE	GYGN	FR	B	100	SC	9		70	20					1	0.1					
C97PT16	33	34	QMS	BMS	CH	SE	GYGN	FR	B	100	SC	9	20	60	10					1	0.1					

Hole	Fm	To	Maj	Min1	Min2	Alter	Col	Wth	H2O	Ret	Texture	Qtz	BMS	QMS	CHT	SI	GW	SH	Lim	Py	AsPy	Oth Sulph	Per	Oth Min	Per	Comments
C97PT16	34	35	QMS				GY	FR	B	100	SC			100						0.1						
C97PT16	35	36	QMS	BMS			GY	FR	B	100	SC		39	60						1						
C97PT16	36	37	QMS				GY	FR	B	100	SC			100						0.1						
C97PT16	37	38	BMS	QMS	CH		GY	FR	B	100	SC		75	20	5					0.1	0.1					
C97PT16	38	39	QMS	BMS	CH		GY	FR	B	100	SC		25	70	5					0.1						
C97PT16	39	40	QV	QMS			WHGY	FR	B	100	SC	58		40						2						
C97PT16	40	41	QMS	CH		SE	GYGN	FR	B	100	SC			90	9					1						
C97PT16	41	42	QMS	BMS	QV	SE	GY	FR	B	100	SC	10	40	50						0.1						
C97PT16	42	43	CH	QMS		SEKS	GYBN	FR	B	100	SC			30	69					1						
C97PT16	43	44	CH	QMS	QV	SE	GYGN	FR	B	100	SC	5		45	50					0.1						
C97PT16	44	45	QMS	QV		SE	GY	FR	B	100	SC	10		90	0.1					0.1						
C97PT16	45	46	BMS	QMS	QV	SE	GYGN	FR	B	100	SC	5	55	40						0.1						
C97PT16	46	47	QMS	QV		SEHM	GYWHRD	FR	B	100	SC	10		90						0.1						
C97PT16	47	48	BMS	QMS	QV	SEHM	GYGNWH	FR	B	100	SC	4	75	20						1						
C97PT16	48	49	BMS	QMS	CH	SEHM	GYGN	FR	B	100	SC	4	70	20	5					1						
C97PT16	49	50	QMS	QV		SE	GYGN	FR	B	100	SC	20		80						0.5						
C97PT16	50	51	BMS	QMS	QV	SE	GYGN	FR	B	100	SC	20	50	30						0.5						
C97PT16	51	52	CH	BMS	QMS	SE	LIGYGN	FR	B	100	SC	5	10	15	70					0.5						
C97PT16	52	53	GR	QMS	QV	SEKS	OGGYGN	FR	B	100	SC	20		40	4					1	0.1		GR	35	???	
C97PT16	53	54	GR	QMS	QV	SEKS	GYOGGN	FR	B	100	SC	5		70	4					1	0.1		GR	20		
C97PT16	54	55	QMS	QV		SEKS	GYWH	FR	B	100	SC	30		70						0.5	0.1		GR	0.1		
C97PT16	55	56	QMS	CH	QV	SEKS	GY	FR	B	100	SC	10		70	20					0.1	0.1		GR	0.1		
C97PT16	56	57	QMS	QV		SE	GY	FR	B	100	SC	5		95						0.1						

Hole	Fm	To	Maj	Min1	Min2	Alter	Col	Wth	H2O	Ret	Texture	Qtz	BMS	QMS	CHT	SI	GW	SH	Lim	Py	AsPy	Oth Sulph	Per	Oth Min	Per	Comments
C97PT16	57	58	QMS	CH		SE	GY	FR	B	100	SC	0.1		95	5					0.1						
C97PT16	58	59	QMS	BMS		SF	GY	FR	B	100	SC		40	60						0.5						
C97PT16	59	60	QMS	CH		SE	GY	FR	B	100	SC			90	10					0.1						
C97PT16	60	61	QMS	BMS			GY	FR	B	100	SC		10	90						0.1						
C97PT16	61	62	QMS	QV	CH	SE	GY	FR	B	100	SC	5		90	5					0.1						
C97PT16	62	63	GR	QMS	QV	SE	LTGNGY	FR	B	100	EQ	10		20						0.1				GR	70	
C97PT16	63	64	GR	QMS		SE	LTGNGY	FR	B	100	EQ			5										GR	95	
C97PT16	64	65	QMS	GR		SE	GYGN	FR	B	100	SC			90										GR	10	
C97PT16	65	66	QMS	CH	QV	SE	GYGN	FR	B	100	SC	10		80	10					0.1						
C97PT16	66	67	QMS	GR	QV	SF	GYGN	FR	B	100	SC	5		90						0.1				GR	5	
C97PT16	67	68	QMS	GR		KSSE	GYPK	FR	B	100	SC			90						0.1				GR	10	
C97PT16	68	69	QMS	BMS	GR	KSSE	GYPK	FR	B	100	SC		25	70						0.1				GR	5	
C97PT16	69	70	QMS	GR		KSSE	GY	FR	B	100	SC			90						0.1				GR	10	
C97PT16	70	71	QMS			SE	GYGN	FR	B	100	SC	0.1		100												
C97PT16	71	72	QMS			SE	GYGN	FR	B	100	SC			100												
C97PT16	72	73	QMS			SE	GYGN	FR	B	100	SC			100	0.1											
C97PT16	73	74	QMS	GR		SEKS	GYPK	FR	B	100	SC			95										GR	5	
C97PT16	74	75	QMS				GY	FR	B	100	SC			100												
C97PT16	75	76	QMS			SF	GY	FR	B	100	SC			100												
C97PT16	76	77	QMS			SFKS	GY	FR	B	100	SC			99										GR	1	
C97PT16	77	78	QMS			SFKS	GY	FR	B	100	SC			99										GR	1	
C97PT16	78	79	GR	QMS		KSSE	PKGY	FR	B	100	EQ			40										GR	60	
C97PT16	79	80	GR			KSSE	PKGY	FR	B	100	EQ			1										GR	99	

Hole	Fm	To	Maj	Min1	Min2	Alter	Col	Wth	H2O	Ret	Texture	Qtz	BMS	QMS	CHT	SI	GW	SH	Lim	Py	AsPy	Oth Sulph	Per	Oth Min	Per	Comments
97PT16	80	81	QMS	GR		KS	GYPK	FR	B	100	SC			80						0.1				GR	20	
97PT16	81	82	QMS	GR		KS	GYPK	FR	B	100	SC	0.1		95						0.1				GR	5	
97PT16	82	83	QMS	GR		KSSE	GYPK	FR	B	100	SC	0.1		95						0.1				GR	5	
97PT16	83	84	QMS	GR		KSSE	GYGNPK	FR	B	100	SC	0.1		98						0.1				GR	2	
97PT16	84	85	QMS			SE	GYGN	FR	B	100	SC			100										GR	0.1	
97PT16	85	86	QMS	CH		SE	GY	FR	B	100	SC	0.1		95	5											
97PT16	86	87	QMS	GR		KSSE	GYPK	FR	B	100	SC	0.1		80	0.1									GR	20	
97PT16	87	88	GR	QV	QMS	KSSE	PKGN	FR	B	100	SC	5		2										GR	93	
97PT16	88	89	QMS	GR		KSSE	GYGN	FR	B	100	SC			98										GR	2	
97PT16	89	90	QMS	GR		KSSE	GYGN	FR	B	100	SC			98										GR	2	
97PT16	90	91	QMS	GR		KSSE	GYGN	FR	B	100	SC			98										GR	2	
97PT16	91	92	GR	QMS		KSSE	PKGYGN	FR	B	100	SC	0.1		40						0.1				GR	60	
97PT16	92	93	GR	QMS		KSSE	PKGY	FR	B	100	SC			50										GR	50	
97PT16	93	94	QMS	GR		KS	GYPK	FR	B	100	SC			95						0.1				GR	5	
97PT16	94	95	QMS	GR	QV	KSSE	GYPKGN	FR	B	100	SC	5		90						0.1				GR	5	
97PT16	95	96	QMS	GR		KSSE	GYPKGN	FR	B	100	SC			95						0.1				GR	5	
97PT16	96	97	QMS	GR		SFKS	GYGNPK	FR	B	100	SC			90						0.1				GR	10	
97PT16	97	98	QMS	GR		KSSE	GYPK	FR	B	100	SC			90						0.1				GR	10	
97PT16	98	99	QMS			SE	GY	FR	B	100	SC	1		98						0.1				GR	1	
97PT16	99	100	QMS			SE	GYGN	FR	B	100	SC	1		99						0.1						E.O.H
97PT18	0	1	QMS	QV		HM	RDBN	SW	D	30	SC	5		95			80							CL	0.1	OPEN HOLE
97PT18	1	2	QMS	QV		HM	GYBN	SW	D	100	SC	5		95			50							CL	0.1	OPEN HOLE
97PT18	2	3	QMS				GYBN	SW	D	100	SC			100			50							CL	0.1	OPEN HOLE

Hole	Fm	To	Maj	Min1	Min2	Alter	Col	Wth	H2O	Ret	Texture	Qtz	BMS	QMS	CHT	SI	GW	SH	Lim	Py	AsPy	Oth Sulph	Per	Oth Min	Per	Comments
RC97PT18	3	4	QMS	QV			GYBN	SW	D	100	SC	1		99					40					CL	0.1	OPEN HOLE
RC97PT18	4	5	QMS	QV	CB		GYBN	SW	D	100	SC	5		90					30					CL	0.1	
RC97PT18	5	6	QMS	QV	CB		GYBN	SW	D	100	SC	5		94					30					CL	0.1	
RC97PT18	6	7	QMS	QV			GYBN	SW	D	100	SC	5		95					20							
RC97PT18	7	8	QMS	QV		HM	GYBN	SW	D	100	SC	10		90					20							
RC97PT18	8	9	QMS	QV			GYBN	SW	D	100	SC	5		95					10							
RC97PT18	9	10	QMS	QV			GYBN	SW	D	100	SC	5		95					10							
RC97PT18	10	12	QMS	QV			GYBN	SW	D	100	SC	10		90					10							
RC97PT18	12	13	QMS	QV			GYBN	SW	D	100	SC	10		90					40							
RC97PT18	13	14	QMS	QV	CH		GYBN	SW	D	100	SC	5		90	5				30							
RC97PT18	14	15	QMS	QV	CI		GYBN	SW	D	100	SC	10		85					10					CL	5	
RC97PT18	15	16	QMS	QV			GYBN	SW	D	100	SC	10		90					10					CL	0.1	
RC97PT18	16	17	QMS	QV			GYBN	SW	D	100	SC	10		90					10							
RC97PT18	17	18	QMS	QV			GYBN	SW	D	100	SC	1		99					10							
RC97PT18	18	19	QMS	QV			GYBN	SW	D	100	SC	5		95					5	0.1						
RC97PT18	19	20	QMS	QV			GYBN	SW	D	100	SC	5		95					5	0.1						
RC97PT18	20	21	QMS	QV			GYBN	SW	D	100	SC	5		95					5	0.1						
RC97PT18	21	22	QMS	QV		HM	GYBN	SW	B	100	SC	10		90					2							WATER TABLE
RC97PT18	22	23	QMS	BMS		SL	GY	SW	B	100	SC		30	70					1							
RC97PT18	23	24	QMS	QV		SE	GYWH	SW	B	100	SC	30		70					1	0.1						
RC97PT18	24	25	QMS	QV		SE	GY	SW	B	100	SC	10		90					1	0.1						
RC97PT18	25	26	BMS	QMS	QV	SE	GY	SW	B	100	SC	1	80	19					1	0.1						
RC97PT18	26	27	BMS			SE	GY	SW	B	100	SC	0.1	100						0.1	0.1						

Hole	Fm	To	Maj	Min1	Min2	Alter	Col	Wth	H2O	Ret	Texture	Qtz	BMS	QMS	CHT	SI	GW	SH	Lim	Py	AsPy	Oth Sulph	Per	Oth Min	Per	Comments
97PT18	27	28	BMS	QMS		SE	GY	FR	B	100	SC		70	29						1						
97PT18	28	29	BMS	CH	QV	SEFE	GY	FR	B	100	SC	5	90		5					0.1						
97PT18	29	30	BMS	CH	QV	SEFE	RDGYWH	FR	B	100	SC	20	60		20					0.1						
97PT18	30	31	BMS	QMS	CH	SE	GY	FR	B	100	SC	5	50	40	4					1						
97PT18	31	32	QMS	BMS	QV		GY	FR	B	100	SC	5	30	65						0.1						
97PT18	32	33	QMS	BMS	QV		GY	FR	B	100	SC	5	30	65						0.1						
97PT18	33	34	QMS	BMS	QV		GY	FR	B	100	SC	10	40	50						0.1						
97PT18	34	35	BMS	QMS	QV		GY	FR	B	100	SC	1	90	9						0.1						
97PT18	35	36	QMS	BMS	QV		GY	FR	B	100	SC	2	60	37						1	0.1					
97PT18	36	37	QMS			SE	GY	FR	B	100	SC			100						0.1						
97PT18	37	38	QMS	QV			GY	FR	B	100	SC	5		95						0.5						
97PT18	38	39	QMS	BMS	QV		GY	FR	B	100	SC	2	40	58						0.5						
97PT18	39	40	QMS	BMS	QV		GY	FR	B	100	SC	1	49	50						0.1						
97PT18	40	41	QMS	BMS	QV		GY	FR	B	100	SC	10	40	50						0.5	0.1					
97PT18	41	42	QMS	BMS	QV		GY	FR	B	100	SC	1	49	50						0.5	0.1					
97PT18	42	43	QMS	BMS	QV		GY	FR	B	100	SC	5	45	50						0.1	0.1					
97PT18	43	44	QMS	BMS	QV		GY	FR	B	100	SC	5	45	50						0.1	0.1					
97PT18	44	45	QMS	QV		SEGA	GYGN	FR	B	100	SC	10		90						0.1	0.1					
97PT18	45	46	QMS	BMS	QV	SEGA	GYGN	FR	B	100	SC	5	30	65						0.1						
97PT18	46	47	QMS				GY	FR	B	100	SC	0.1		100						0.1						
97PT18	47	48	QMS			SE	GYGN	FR	B	100	SC			100						0.1						
97PT18	48	49	QMS	CH		SE	GY	FR	B	100	SC			99	1					0.1						
97PT18	49	50	QMS			SE	GY	FR	B	100	SC			100						0.1						

ole	Fm	To	Maj	Min1	Min2	Alter	Col	Wth	H2O	Ret	Texture	Qtz	BMS	QMS	CHT	SI	GW	SH	Lim	Py	AsPy	Oth Sulph	Per	Oth Min	Per	Comments
7PT18	50	51	QMS			SE	GY	FR	B	100	SC	0.1		100	0.1					0.1						
7PT18	51	52	QMS			SE	GYGN	FR	B	100	SC	0.1		100	0.1					0.1						
7PT18	52	53	QMS	QV		SE	GY	FR	B	100	SC	10		90						0.1	0.1					
7PT18	53	54	QMS	QV		SE	GY	FR	B	100	SC	2		98						0.1	0.1					
7PT18	54	55	QMS	QV		SE	GY	FR	B	100	SC	10		90						0.1	0.1					
7PT18	55	56	QMS	QV		SE	GY	FR	B	100	SC	1		99						0.1	0.1					
7PT18	56	57	QMS	QV		SE	GY	FR	B	100	SC	1		99						0.1	0.1					
7PT18	57	58	QMS	GR	QV	SE	GY	FR	B	100	SC	2		90						0.1	0.1			GR	8	
7PT18	58	59	QMS			SE	GY	FR	B	100	SC	1		98	1											
7PT18	59	60	QMS	QV	CH	SE	GY	FR	B	100	SC	1		98	1											
7PT18	60	61	QMS			SE	GY	FR	B	100	SC			100	0.1					0.1						
7PT18	61	62	QMS	GR		SE	GY	FR	B	100	SC			99						0.1				GR	1	
7PT18	62	63	QMS	GR	QV	SEKS	GYPK	FR	B	100	SC	1		70						0.1				GR	29	
7PT18	63	64	GR	QV	QMS	KSSE	PKGY	FR	B	100	EQ	5		1						0.1				GR	94	
7PT18	64	65	GR	QV		KS	PKGY	FR	B	100	EQ	5												GR	95	
7PT18	65	66	GR	QV		KS	PKGY	FR	B	100	EQ	1												GR	99	
7PT18	66	67	GR	QV	QMS	KS	PKGY	FR	B	100	EQ	1		1										GR	98	
7PT18	67	68	GR	QMS		KS	PKGY	FR	B	100	EQ			2										GR	98	
7PT18	68	69	GR	QMS		KS	PKGY	FR	B	100	EQ			2										GR	98	
7PT18	69	70	GR	QMS		KS	PKGY	FR	B	100	EQ			2										GR	98	
7PT18	70	71	GR			SEKS	PKGN	FR	B	100	EQ													GR	100	
7PT18	71	72	QMS	GR	QV	SE	GYGN	FR	B	100	SC	2		50										GR	48	
7PT18	72	73	QMS	GR	QV	SE	GYGN	FR	B	100	SC	1		94										GR	4	

Hole	Fm	To	Maj	Min1	Min2	Alter	Col	Wth	H2O	Ret	Texture	Qtz	BMS	QMS	CHT	SI	GW	SH	Lim	Py	AsPy	Oth Sulph	Per	Oth Min	Per	Comments
97PT18	73	74	QMS	GR		SE	GYGN	FR	B	100	SC			70										GR	30	
97PT18	74	75	QMS				GY	FR	B	100	SC			100												
97PT18	75	76	QMS	GR			GY	FR	B	100	SC			98										GR	2	
97PT18	76	77	QMS				GY	FR	B	100	SC			100												
97PT18	77	78	QMS	QV		SE	GY	FR	B	100	SC	5		95												
97PT18	78	79	QMS	QV		SE	GYGN	FR	B	100	SC	1		99												
97PT18	79	80	QMS	QV		SE	GYGN	FR	B	100	SC	1		99												
97PT18	80	81	QMS	GR		SE	GYGN	FR	B	100	SC			90										GR	10	
97PT18	81	82	QMS	GR	QV	SE	GYGN	FR	B	100	SC	1		80										GR	19	
97PT18	82	83	GR	QMS		SEKS	PKGY	FR	B	100	EQ			1										GR	99	
97PT18	83	84	GR	QMS		SEKS	PKGY	FR	B	100	EQ			2										GR	98	
97PT18	84	85	QMS	GR	QV	SE	GYGN	FR	B	100	SC	5		80										GR	15	
97PT18	85	86	QMS	GR	QV	SEKS	GYGNPK	FR	B	100	SC	5		75										GR	20	
97PT18	86	87	GR	QMS		SEKS	PKGYGN	FR	B	100	EQ			40										GR	60	
97PT18	87	88	GR	QMS		SEKS	PKGN	FR	B	100	EQ			5										GR	95	
97PT18	88	89	GR	QMS		SEKS	PKGN	FR	B	100	EQ			5										GR	95	
97PT18	89	90	GR	QMS		SEKS	GNPK	FR	B	100	EQ			1						0.1				GR	99	
97PT18	90	91	GR	QMS		SEKS	GNPK	FR	B	100	EQ			1										GR	99	
97PT18	91	92	QMS	GR		SEKS	GYPKGN	FR	B	100	SC			60										GR	40	
97PT18	92	93	QMS	GR		SEKS	GYPKGN	FR	B	100	SC			60										GR	40	
97PT18	93	94	QMS	GR		SEKS	GYPKGN	FR	B	100	SC			60										GR	40	
97PT18	94	95	QMS				GY	FR	B	100	SC			100						0.1						
97PT18	95	96	QMS	GR		KS	GYPK	FR	B	100	SC			95										GR	5	

Hole	Fm	To	Maj	Min1	Min2	Alter	Col	Wth	H2O	Ret	Texture	Qtz	BMS	QMS	CHT	SI	GW	SH	Lim	Py	AsPy	Oth Sulph	Per	Oth Min	Per	Comments
97PT18	96	97	BMS	QMS	QV		GY	FR	B	100	SC	10	60	30						0.5						
97PT18	97	98	BMS	QMS	QV	SE	GYGN	FR	B	100	SC	2	70	28						0.1						
97PT18	98	99	QMS	BMS	QV	SE	GYGN	FR	B	100	SC	5	30	65						0.1						
97PT18	99	100	QMS	BMS	QV	SE	GYGN	FR	B	100	SC	5	30	65						0.1						E.O.H.
97PT19	0	1	QMS	CL			TNBN	HW	D	50	SC			60					60					CL	40	OPEN HOLE
97PT19	1	2	QMS	CL			BNGYTN	MW	D	100	SC			80					40					CL	20	OPEN HOLE
97PT19	2	3	QMS	QV			GYBN	SW	D	100	SC	2		98					30					CL	0.1	OPEN HOLE
97PT19	3	4	QMS				GYBN	SW	D	100	SC			100					30					CL	0.1	OPEN HOLE
97PT19	4	5	QMS				GYBN	SW	D	100	SC			100					20					CL	0.1	
97PT19	5	6	QMS				GYTN	SW	D	100	SC			100					20					CL	0.1	
97PT19	6	7	QMS				GYTN	SW	D	100	SC			100					20					CL	0.1	
97PT19	7	8	QMS				GYTN	SW	D	100	SC			100					20					CL	0.1	
97PT19	8	9	QMS				GYTN	SW	D	100	SC			100					20					CL	0.1	
97PT19	9	10	QMS				GYTN	SW	D	100	SC	0.1		100					20							
97PT19	10	11	QMS				GYBN	SW	D	100	SC			100					10							
97PT19	11	12	QMS	QV			GY	SW	D	100	SC	2		98					2							
97PT19	12	13	QMS				GY	SW	D	100	SC			100					2							
97PT19	13	14	QMS				GY	SW	D	100	SC			100					2							
97PT19	14	15	QMS				GY	SW	D	100	SC	0.1		100					2							
97PT19	15	16	QMS				GYBN	SW	D	100	SC			100					5							
97PT19	16	17	QMS				GYBN	SW	D	100	SC			100					10							
97PT19	17	18	QMS				GYBN	SW	D	100	SC			100					5							
97PT19	18	19	QMS				GYBN	SW	D	100	SC			100					5							

Hole	Fm	To	Maj	Min1	Min2	Alter	Col	Wth	H2O	Ret	Texture	Qtz	BMS	QMS	CHT	SI	GW	SH	Lim	Py	AsPy	Oth Sulph	Per	Oth Min	Per	Comments
RC97PT19	19	20	QMS				GYBN	SW	D	100	SC			100					5							
RC97PT19	20	21	QMS	QV			GYBN	SW	D	100	SC	10		90					5					CL	0.1	
RC97PT19	21	22	QMS				GYBN	SW	D	100	SC			100					2							
RC97PT19	22	23	QMS	QV			GYBN	SW	D	100	SC	10		90					1							
RC97PT19	23	24	BMS	QMS	QV		GYBN	SW	D	100	SC	5	60	35					1	0.1						
RC97PT19	24	25	BMS	QV			GY	SW	D	100	SC	5	95						1	0.1						
RC97PT19	25	26	BMS	QMS	CH	SE	GY	FR	D	100	SC		90	5	5					0.1						
RC97PT19	26	27	BMS	CH		HM	GY	FR	D	100	SC		90		10					0.1						
RC97PT19	27	28	BMS	QMS	QV		GY	FR	B	100	SC	5	70	25						0.1						WATER TABLE
RC97PT19	28	29	BMS	CH	QV	SE	GYGN	FR	B	100	SC	5	85		10					0.1						
RC97PT19	29	30	BMS	CH	QV	SE	GYGN	FR	B	100	SC	1	94		5					0.1						
RC97PT19	30	31	BMS	CH	QV	SE	GYGN	FR	B	100	SC	1	94		5					0.1						
RC97PT19	31	32	BMS	QMS	CH	SE	GYGN	FR	B	100	SC		60	35	5					0.1						
RC97PT19	32	33	BMS	QMS	QV		GY	FR	B	100	SC	2	50	45	2					1						
RC97PT19	33	34	BMS	QV			GY	FR	B	100	SC	10	89							0.1	0.1					
RC97PT19	34	35	BMS	QMS			GY	FR	B	100	SC		90	10						0.1						
RC97PT19	35	36	BMS	QMS	GR	KS	GY	FR	B	100	SC	2	70	23						0.1				GR	5	
RC97PT19	36	37	QMS	GR		KSSE	GYPK	FR	B	100	SC			90						0.1				GR	10	
RC97PT19	37	38	BMS	QMS	GR	KSSE	GYGN	FR	B	100	SC		80	15						0.1				GR	5	
RC97PT19	38	39	QMS	QV	CH	KSSE	GYGN	FR	B	100	SC	5		90	5					0.1				GR	0.1	
RC97PT19	39	40	QMS			SE	GYGN	FR	B	100	SC			100						0.1						
RC97PT19	40	41	QMS			SE	GYGN	FR	B	100	SC			100						0.1						
RC97PT19	41	42	QMS			SE	GYGN	FR	B	100	SC			100						0.1						

ole	Fm	To	Maj	Min1	Min2	Alter	Col	Wth	H2O	Ret	Texture	Qtz	BMS	QMS	CHT	SI	GW	SH	Lim	Py	AsPy	Oth Sulph	Per	Oth Min	Per	Comments
7PT19	42	43	QMS			SE	GYGN	FR	B	100	SC			100						0.1						
7PT19	43	44	QMS	QV	CH	SE	GYGN	FR	B	100	SC	2		96	2					0.1						
7PT19	44	45	QMS	QV		SE	GYGN	FR	B	100	SC	2		98						0.1						
7PT19	45	46	QMS			SE	GYGN	FR	B	100	SC			100						0.1						
7PT19	46	47	QMS				GY	FR	B	100	SC			100						0.1						
7PT19	47	48	QMS				GY	FR	B	100	SC			100						0.1						
7PT19	48	49	QMS				GY	FR	B	100	SC			100						0.1						
7PT19	49	50	QMS	CH		SE	GYGN	FR	B	100	SC			95	5					0.1						
7PT19	50	51	QMS	QV		SE	GYGN	FR	B	100	SC	3		97						0.1						
7PT19	51	52	QMS			SE	GYGN	FR	B	100	SC			100						0.1						
7PT19	52	53	QMS				GY	FR	B	100	SC			100												
7PT19	53	54	QMS	QV		SE	GY	FR	B	100	SC	5		95						0.1						
7PT19	54	55	QMS	QV	CH	SE	GY	FR	B	100	SC	5		93	2					0.1						
7PT19	55	56	QMS	CH		SE	GYGN	FR	B	100	SC			95	5					0.1						
7PT19	56	57	QMS	CH		SE	GYGN	FR	B	100	SC			90	10					0.1						
7PT19	57	58	QMS	BMS		SE	GYGN	FR	B	100	SC		45	55						0.1						
7PT19	58	59	BMS	QMS	CH	SE	GYGN	FR	B	100	SC	2	60	28	10					0.1						
7PT19	59	60	BMS	QMS	CH	SE	GYGN	FR	B	100	SC	2	60	28	10					0.1						
7PT19	60	61	QMS	CH	QV	SE	GYGN	FR	B	100	SC	5	5	80	10					0.1						
7PT19	61	62	BMS	QMS	CH	SE	GYGN	FR	B	100	SC	5	50	40	5					0.1						
7PT19	62	63	BMS	QMS	CH	SE	GYGN	FR	B	100	SC	5	50	40	5					0.1						
7PT19	63	64	BMS	QMS	CH	SE	GYGN	FR	B	100	SC		70	25	5					0.1						
7PT19	64	65	BMS	QMS			GY	FR	B	100	SC		70	30						0.1						

ole	Fm	To	Maj	Min1	Min2	Alter	Col	Wth	H2O	Ret	Texture	Qtz	BMS	QMS	CHT	SI	GW	SH	Lim	Py	AsPy	Oth Sulph	Per	Oth Min	Per	Comments
7PT19	65	66	BMS	QV			GY	FR	B	100	SC	5	95							0.1						
7PT19	66	67	BMS	QMS	CH	SE	GY	FR	B	100	SC	5	70	20	5					0.1						
7PT19	67	68	BMS	QMS	CH	SE	GY	FR	B	100	SC		75	20	5					0.1						
7PT19	68	69	BMS	QMS	CH	SE	GY	FR	B	100	SC		78	20	2					0.1						
7PT19	69	70	BMS	CH		SE	GYGN	FR	B	100	SC		95		4					1						
7PT19	70	71	QMS	BMS	QV	SEGA	GYGN	FR	B	100	SC	2	70		27					1						
7PT19	71	72	BMS	QV		SE	GY	FR	B	100	SC	5	95							0.1						
7PT19	72	73	BMS	CH	QV	SI	GYGN	FR	B	100	SC	5	90		5					0.1						
7PT19	73	74	BMS	CH			GY	FR	B	100	SC		99		1											
7PT19	74	75	QMS	QV	CH	SE	GYGN	FR	B	100	SC	10	80		10					0.1						
7PT19	75	76	BMS	GR	QV	SE	GY	FR	B	100	SC	10	85							0.1				GR	5	
7PT19	76	77	BMS				GY	FR	B	100	SC		100							0.5						
7PT19	77	78	BMS	QV			GY	FR	B	100	SC	10	90							0.5						
7PT19	78	79	BMS	QV			GY	FR	B	100	SC	1	99							0.1						
7PT19	79	80	BMS				GY	FR	B	100	SC		100							0.1						
7PT19	80	81	BMS				GY	FR	B	100	SC		100							0.1	0.1					
7PT19	81	82	BMS	QMS	QV		GY	FR	B	100	SC	1	98	1						0.1	0.1					
7PT19	82	83	BMS	QMS	GR	SI	GYGN	FR	B	100	SC	2	80	10						0.1				GR	8	
7PT19	83	84	BMS	QMS			GY	FR	B	100	SC		50	50												
7PT19	84	85	QMS	BMS	CH	SEGA	GY	FR	B	100	SC	2	40	53	5					0.1						
7PT19	85	86	BMS	QMS	GR	SEKS	GY	FR	B	100	SC		80	10	5									GR	5	
7PT19	86	87	BMS	GR	QV	SEKS	GYWHPK	FR	B	100	SC	2	90							0.1				GR	7	
7PT19	87	88	BMS	QV			GY	FR	B	100	SC	5	95							0.1						

ole	Fm	To	Maj	Min1	Min2	Alter	Col	Wth	H2O	Ret	Texture	Qtz	BMS	QMS	CHT	SI	GW	SH	Lim	Py	AsPy	Oth Sulph	Per	Oth Min	Per	Comments
7PT19	88	89	BMS	QV	CH	SE	GY	FR	B	100	SC	10	89		1					0.1						
7PT19	89	90	BMS	QMS	QV	SE	GY	FR	B	100	SC	20	60	20						0.1	0.1					
7PT19	90	91	BMS	QMS	QV	SE	GY	FR	B	100	SC	20	60	20						0.1	0.1					
7PT19	91	92	QV	QMS		SE	LTGY	FR	B	100	SC	70		29						1	0.1					
7PT19	92	93	QV	QMS		SE	LTGYGN	FR	B	100	SC	70		29						1	0.1					
7PT19	93	94	QV	QMS	CH	SE	LTGYGN	FR	B	100	SC	80		10	9					1	0.1					
7PT19	94	95	BMS	CH		SE	GYGN	FR	B	100	SC		90		9					1	0.1					
7PT19	95	96	BMS	QV	CH	SE	GYGN	FR	B	100	SC	5	90		5					1	0.5					
7PT19	96	97	QMS	GR	BMS	SE	LTGNGY	FR	B	100	SC		20	50						0.5	0.1			GR	30	
7PT19	97	98	GR	QMS		SE	LTGNGY	FR	B	100	EQ			5						0.1	0.1			GR	95	
7PT19	98	99	GR	QV		SE	LTGNGY	FR	B	100	EQ	5								0.1				GR	95	
7PT19	99	100	GR	QV		SE	LTGNGY	FR	B	100	EQ	5								0.1				GR	95	
7PT19	100	101	GR			SE	LTGNGY	FR	B	100	EQ													GR	100	
7PT19	101	102	GR			SE	LTGNGY	FR	B	100	EQ													GR	100	
7PT19	102	103	GR			SE	LTGNGY	FR	B	100	EQ									0.1				GR	100	
7PT19	103	104	GR			SE	LTGNGY	FR	B	100	EQ									0.1				GR	100	
7PT19	104	105	GR			SE	LTGNGY	FR	B	100	EQ													GR	100	
7PT19	105	106	GR			SE	GNGY	FR	B	100	EQ													GR	100	E.O.H.

APPENDIX 4

Environmental Register

TENEMENT ENVIRONMENTAL MANAGEMENT REGISTER
LAND STATUS RECORD

Project: Pine Creek

Tenement Name: Bonrook **Loc. Code:** HK92

Tenement No's: EL 8624

Registered Holder(s): Nullarbor Holdings Limited (89.99%)
Acacia Resources Ltd (20.01%)

Date Granted: 20/9/94 **Term:** 3 years **Area:** 2 blocks

Bond/Security: $1000, lodged by title holders

JV Partners (if any): Acacia Resources Limited & Nullabor Holdings

Land Classification: **(Crown, Private, Lease)** Lease

Land Holder/Occupier: Franz Weber Foundation **Station:** Bonrook

Address: C/- Forwood Pastoral Services
GPO Box 1547, Darwin NT, 0801 **Phone:** (08) 89 81 1508

Contacted By: Chris Spurway **Date:** Sept 1997

Pastoral Notes: **(Stock, Cultivation, Access, Rainfall)**

Bonrook Lodge, Station Managers quarters and various sheds and stables. Wild Horse Sanctuary & tourism activities. Station divided into various paddocks by ring lock and barbed wire fences

Environmental Notes: **(Flora/Fauna, Erosion, Bushfires, Flooding)**

Open Tropical Savannah

Groundwater: **(Bores/Wells/Dams, streams, drainage, test data)**

Several water bores are located on the property

Aboriginal Notes: **(Sacred Sites, Cultural)**

There are no registered sites within the tenement.

Historic Relics: **(Mine Workings, Equipment, Homesteads etc.)**

Nil

Previous Activity: **(Mining, Exploration, Forestry, etc.)**

Licence previously covered by numerous exploration companies, no substantial disturbance evident.

TENEMENT ENVIRONMENTAL MANAGEMENT REGISTER
PRE-EXISTING ENVIRONMENTAL DISTURBANCE RECORD

Tenement Name: Bonrook **No(s):** EL 8624

Exploration Activity Area:

Shafts/Pits/Dumps:

Track/Access:

Tenement can be accessed along northern margin by "Old Wandie Track".

Access tracks exist along NT Gas Pipeline and along Power Transmission Lines.

Pastoral tracks constructed in and around Bonrook Homestead and leading to all water bores.

Line Clearing: None

Costeaning: Three previous costeans (Acacia) have been rehabilitated.

Drill Sites: Six previous drill sites (Acacia) have been rehabilitated.

Other:

Location Data: 1:250 000 PINE CREEK SD52-08
1:100 000 PINE CREEK 5270

Other Ref:

Compiled by: Neil Martin **Date:** 9/10/98

TENEMENT ENVIRONMENTAL MANAGEMENT REGISTER
ACACIA ENVIRONMENTAL IMPACT RECORD

Tenement Name: Bonrook **No (s):** EL 8624

Report Ref No's: 08.7536
08.8415
08.8947

Exploration Activities:

Gridding.
Rock chip sampling
Soil sampling - mechanical auger to 4.5m or hoe pick
Costeaning.
RC drilling.
Gradient Array IP survey.
Aeromagnetic, radi0metric & aerial photographic surveys.

Grids & Traverses:

7km gridding	1994/95
22km gridding	1995/96
500m gridding	1996/97
250m gridding	1997/98

Soil Sampling:

292 samples	1994/95
645 samples	1995/96
20 samples	1996/97
11 samples	1997/98

Costeans / Pits:

three costeans (475m)	1995/96
six costeans (638m)	1996/97
five costeans (704m)	1997/98

Drilling:

sic RC holes	1995/96
eight RC holes	1996/97
twelve RC holes	1997/98

Drill Traverses: See above

Drill Pads: Minor clearing of vegetation for RC rig access.

Ground Geophysics: Gradient Array IP Survey 1996/97

Access Tracks: Nil

Camps: Nil

Other: Nil

Compiled by: Neil Martin **Date:** 9/10/98

TENEMENT ENVIRONMENTAL MANAGEMENT REGISTER
ACACIA REHABILITATION RECORD

Tenement Name: Bonrook **No(s):** EL 8624

Disturbance: **Rehabilitation:** **Date:**

Grids & Traverses: Approximately 30 line km of 200 x 50m cross line gridding marked with galvanised fence droppers. Fence droppers left in place as future reference for exploration.

Soil Sampling: Soil Sampling holes back filled at time of surveys

Costeans/Pits:

1995/96	backfilled & topsoil replaced	Sept. 96
1996/97	backfilled & topsoil replaced	Sept. 97
1997/98	backfilled & topsoil replaced	Sept. 98

Drilling:

1996/97	bags removed & holes capped	Sept. 96
1997/98	bags removed & holes capped	Sept. 97

Drill Traverses:

Drill Pads:

Ground Geophysics:

Access Tracks:

Camps:

Other:

Inspected / Clearance: **Bond/Security released:**

Compiled by: Neil Martin **Date:** 9/10/98

Follow-up Inspection Report:

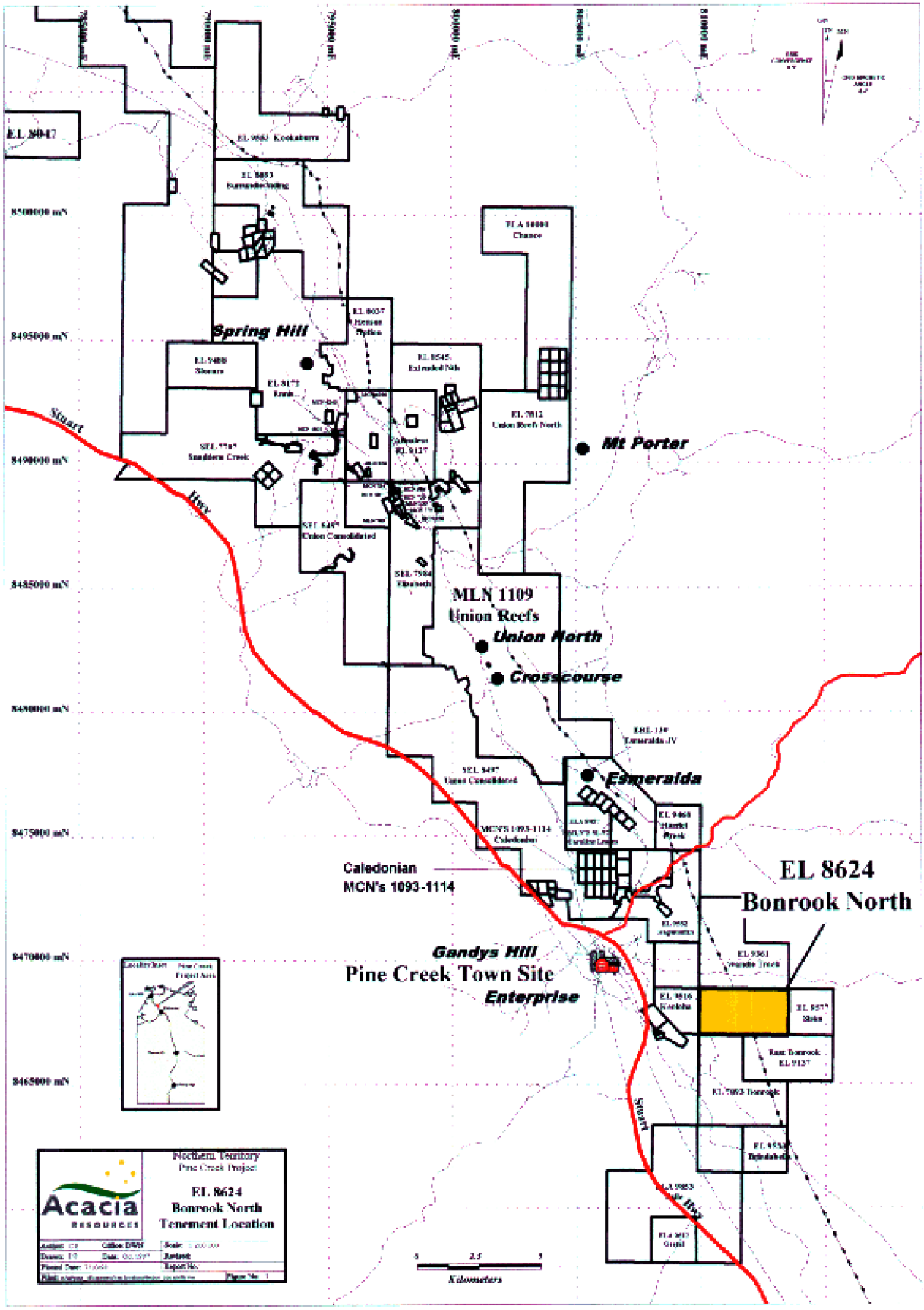
Spring Hill
Mt Porter
Stuart
Hwy
MLN 1109
Union Reefs
Union North
Crosscourse
Esmeralda
Caledonian
MCN's 1093-1114
EL 8624
Bonrook North
Gandys Hill
Pine Creek Town Site
Enterprise
Kilometers
Acacia
RESOURCES
Northern Territory
Pine Creek Project
EL 8624
Bonrook North
Tenement Location

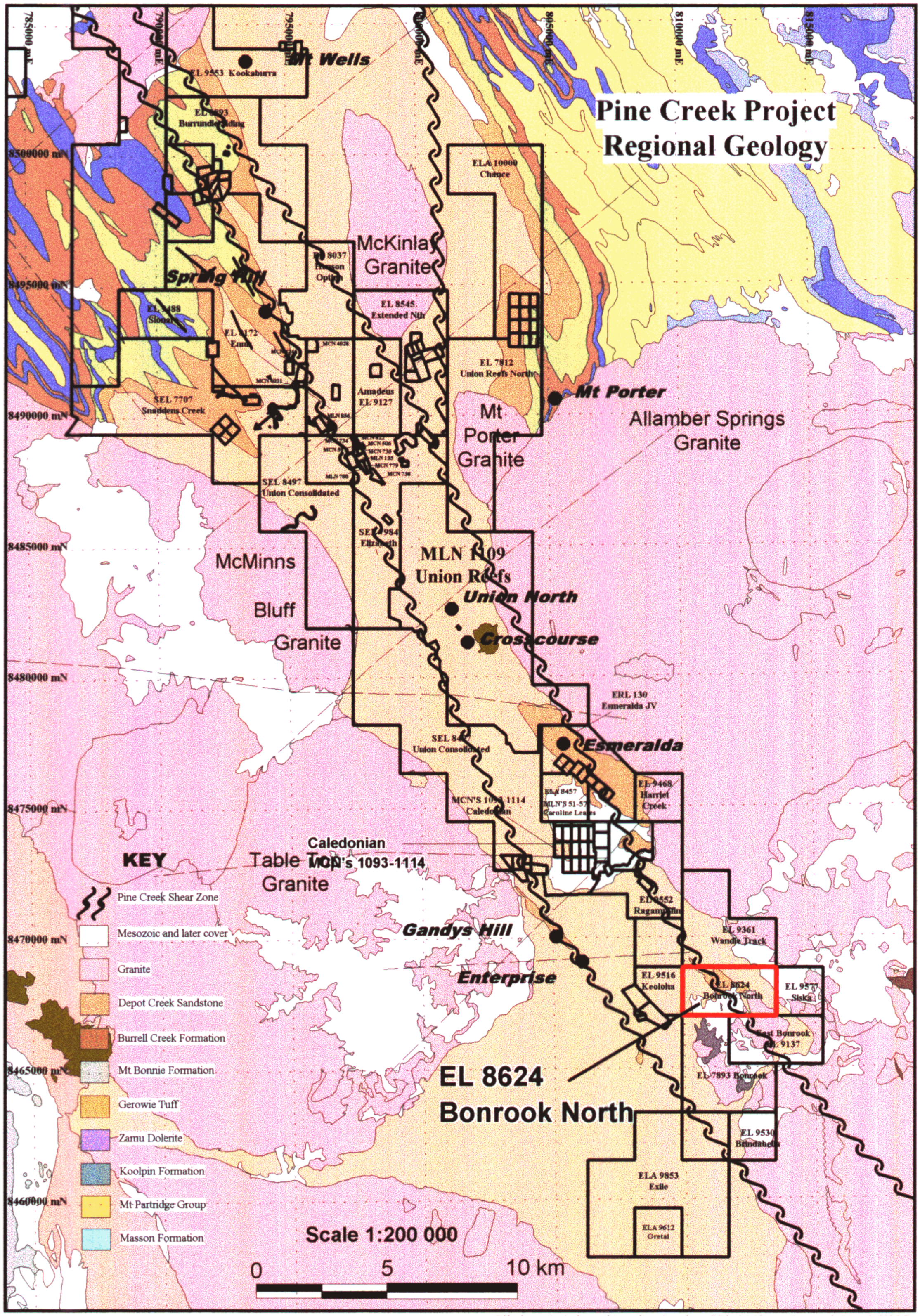

Filed:- m:\nt\pine_ck\geology\regional\Pk 200kA4 Bonrook North.WOR

Figure 2

EL 8624

Soil Gold Contours

- >1000 ppb
- 250-1000 ppb
- 100-250 ppb
- 50-100 ppb
- 10-50 ppb
- 5-10 ppb
- 2-5 ppb

12m@ 0.93g/t, incl. 4m@ 2.25g/t.

10m@ 0.43g/t.

3m@ 4.48g/t from 27

17m@ 0.50g/t from 35

18m@ 0.35g/t, incl. 6m@ 0.59g/t & 2m@ 1.09g/t.

3m@ 0.70g/t from 12

8m@ 0.89g/t, incl. 2m@ 2.08g/t.

2m@ 0.58g/t from 31

2m@ 1.32g/t from 36

8m@ 0.75g/t from 46
including
3m @ 0.54g/t from 46
3m@ 1.44g/t from 51

2m@ 0.47g/t from 104m

2m@ 0.31g/t from 102m

2m@ 0.27g/t

6m@ 1.16g/t
& 2m@ 0.91g/t
& 16m@ 0.47g/t

1m@4.64g/t from 51
6m@ 0.76g/t from 61

6m@ 0.68g/t from 11
5m@ 0.63g/t from 18

9m@ 2.53g/t from 3
including
4m@ 5.0g/t from 3
2m@ 0.98g/t from 69

2m@ 2.06g/t from 28
8m@ 0.67g/t from 80
including
2m @ 1.55g/t from 80

2m@ 0.34 g/t from 38m
2m@ 0.34 g/t from 26m

0 0.1 0.2
Kilometers

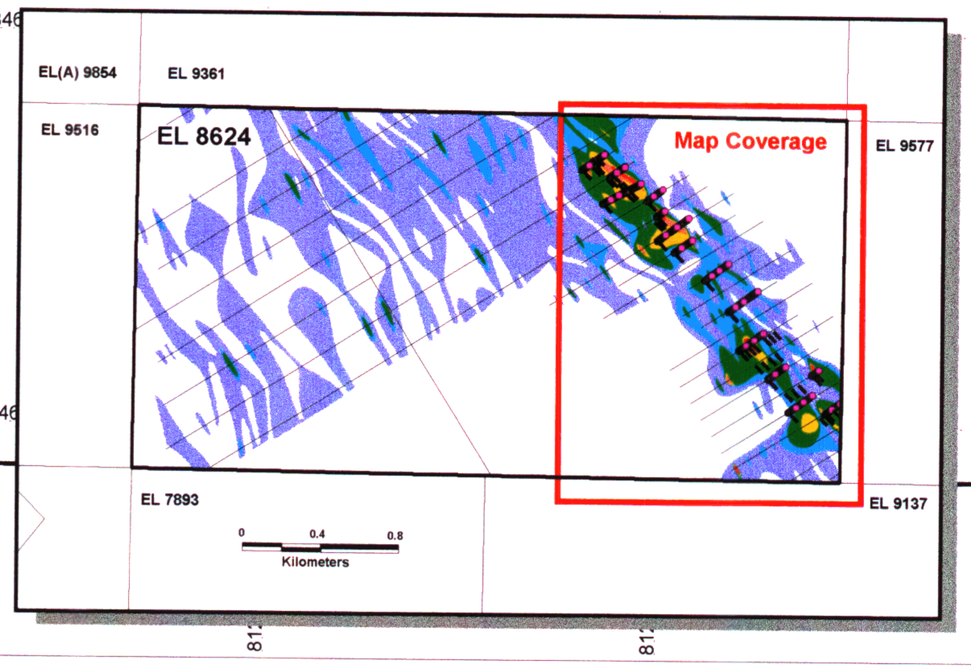

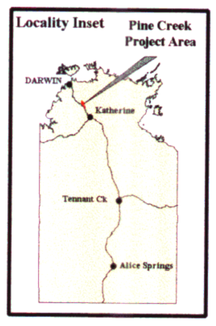

Legend

- RC Hole (using nominal coordinates)
- Costean Location

AMGN
TN MN
GRID CONVERGENCE 0.5°
GRID-MAGNETIC ANGLE 4.4°

CR98/657

Acacia RESOURCES

Northern Territory
Pine Creek Project

EL 8624 - Bonrook Drilling and Costean Locations

Author: N.M.	Office: DWN	Scale: 1:2 500
Drawn: A.L.H.	Date: 8/10/98	Revised:
Plotted Date: 8/10/98		Report No.:
Projection/Grid:		
Filed: m:\nt\pine_ck\drilling\bonrook\Bonrook_costean_Rc_plan.WOR		Figure No: 3

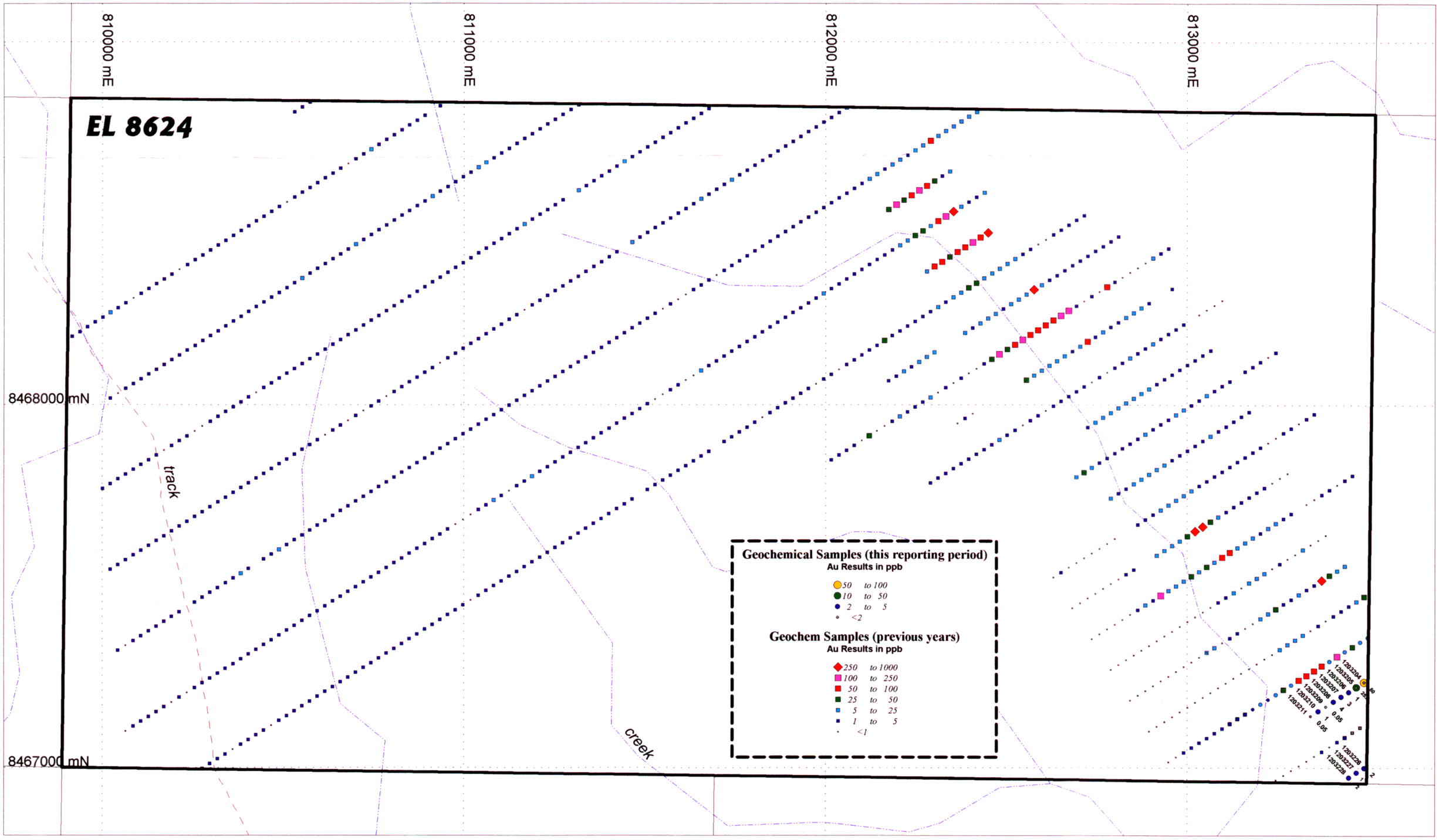

Key

1203211 ● 6 Sample Number / Au Result ppb for this reporting period

CR98/657

0 0.25 0.5

Kilometers

GN
TN MN
GRID CONVERGENCE 0.6°
GRID-MAGNETIC ANGLE 4.4°

Acacia RESOURCES

Northern Territory
Pine Creek Project

EL 8624 - Bonrook North Soils Sample Locations Au Results in ppb

Author: N.M.	Office: DWN	Scale: 1:10 000
Drawn: A.L.H.	Date: 8/10/98	Revised:
Plotted Date: 8/10/98		Report No.:
Filed: m:\nt\~\~\soils\bonrook\Bon North 10kA3 VACsoil au.WOR		Figure No: 4

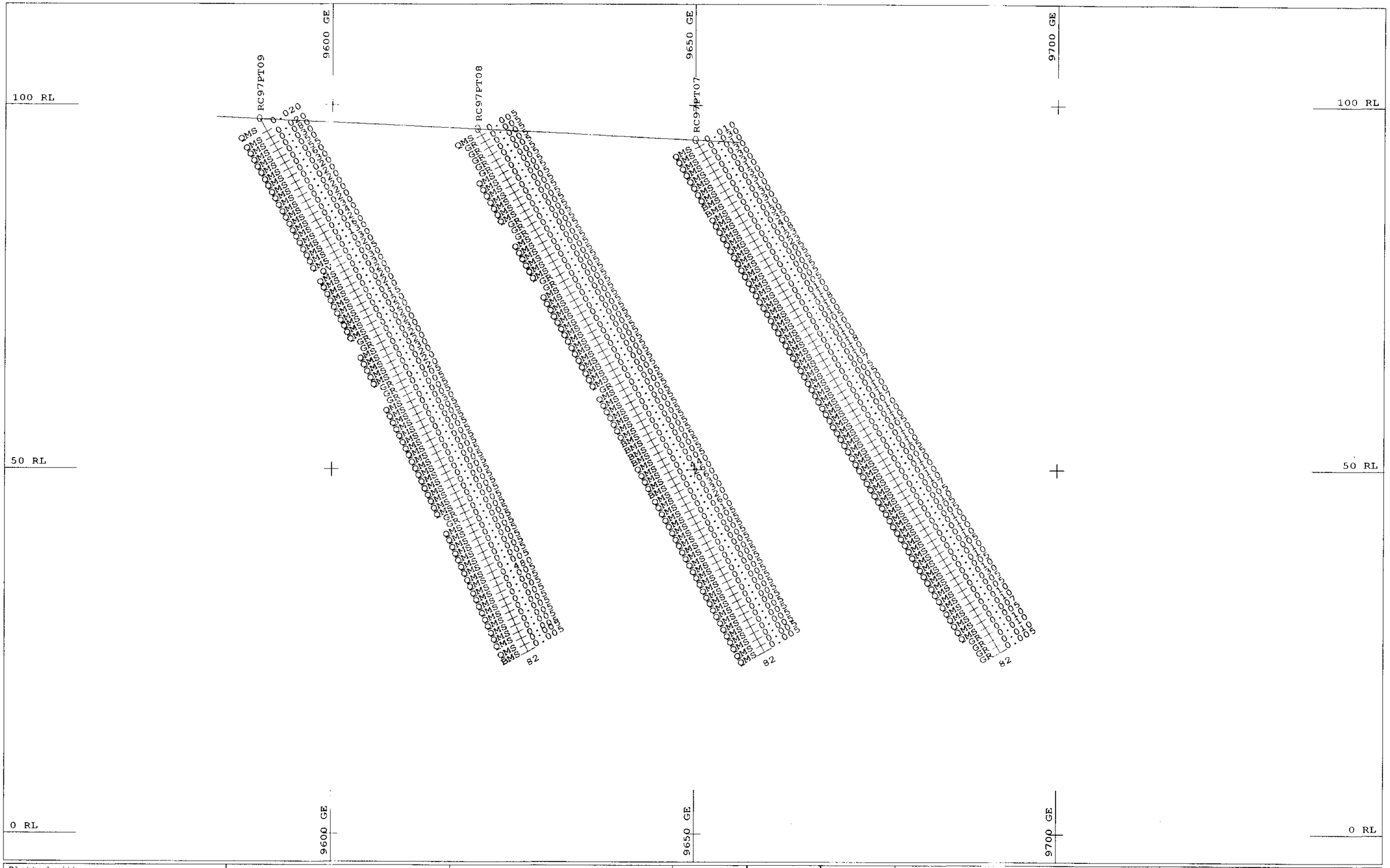

Plotted with

MICROMINE
Resources Software
Perth, Australia
Tel +61 8 9389 8722
Fax +61 8 9386 7462

LHS PRIMARY LITHOLOGY
RHS GOLD IN PPM

14500N - LOOKING NORTH
NOMINAL COORDINATES
LOCAL GRID
to match geochem data
see report text

Scale	DATE	SHEET
1:500	01/04/97	1 of 1
	REF No. 08.9647	FILE DHNSE

0 25m

ACACIA RESOURCES
BONROOK JV
14500 NORTH

REPT. NO. 08.9647
FIGURE 5

CR98/657

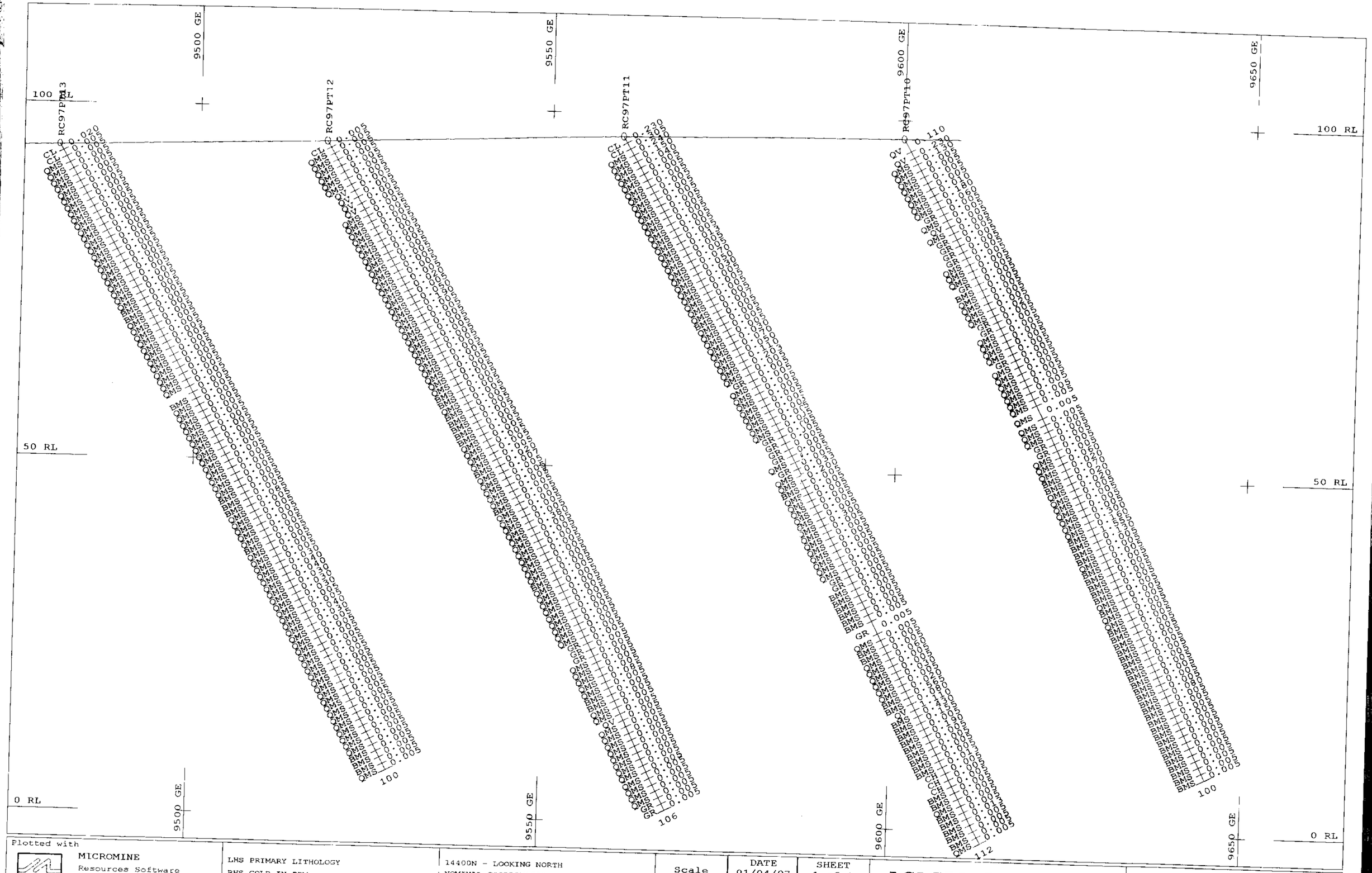

Plotted with

MICROMINE
Resources Software
Perth, Australia
Tel +61 8 9389 8722
Fax +61 8 9386 7462

LHS PRIMARY LITHOLOGY
RHS GOLD IN PPM

14400N - LOOKING NORTH
NOMINAL COORDINATES
LOCAL GRID
to match geochem data
see report text

Scale	DATE	SHEET
1:500	01/04/97	1 of 1
	REF No. 08.9647	FILE DHNSE2

0 — 25m

ACACIA RESOURCES
BONROOK JV
14400 NORTH

REPT. NO. 08.9647
FIGURE 6

CR98/657

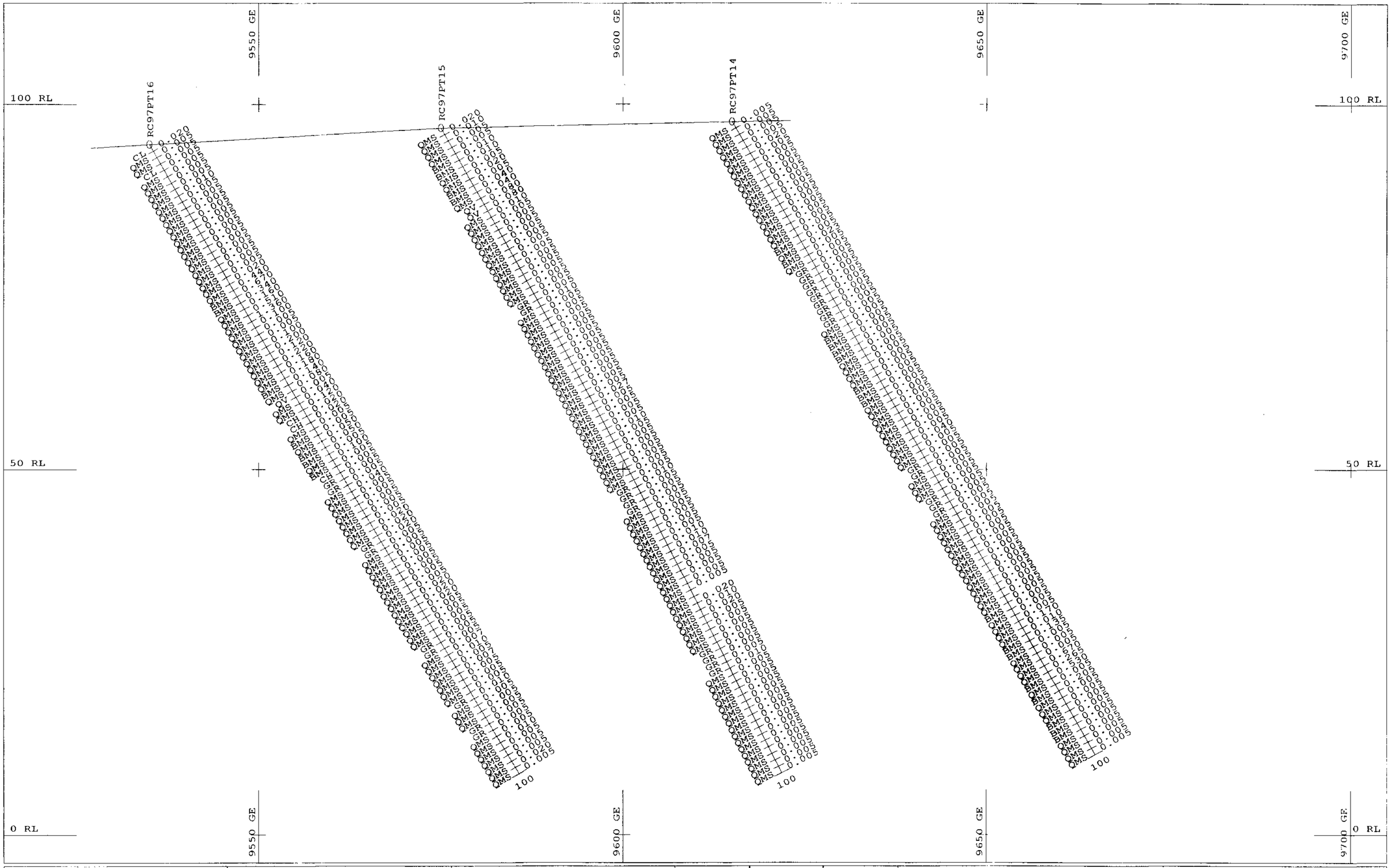

Plotted with MICROMINE Resources Software Perth, Australia Tel +61 8 9389 8722 Fax +61 8 9386 7462	LHS PRIMARY LITHOLOGY RHS GOLD IN PPM	14200N - LOOKING NORTH NOMINAL COORDINATES LOCAL GRID to match geochem data see report text	Scale 1:500	DATE 01/04/97 REF No. 08.9647	SHEET 1 of 1 FILE DHNSE3	ACACIA RESOURCES BONROOK JV 14200 NORTH	REPT. NO. 08.9647 FIGURE 7

0 25m

CR98/657

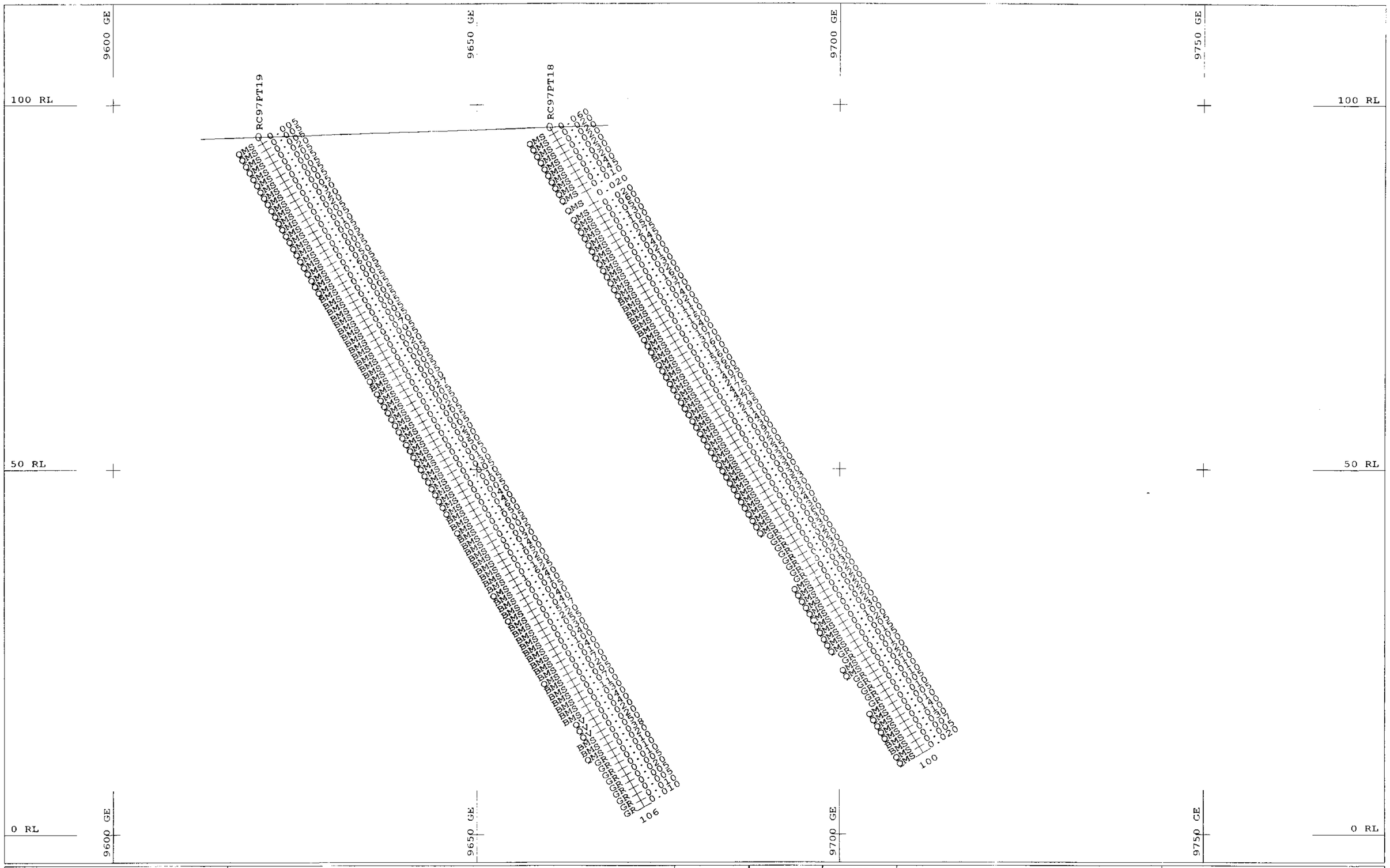

Plotted with
MICROMINE
Resources Software
Perth, Australia
Tel +61 8 9389 8722
Fax +61 8 9386 7462

LHS PRIMARY LITHOLOGY
RHS GOLD IN PPM

14000N - LOOKING NORTH
NOMINAL COORDINATES
LOCAL GRID
to match geochem data
see report text

Scale	DATE 01/04/97	SHEET 1 of 1
1:500	REF No. 08.9647	FILE DHNSE4

0 25m

ACACIA RESOURCES
BONROOK JV
14000 NORTH

REPT. NO. 08.9647
FIGURE 8

CR98/657

CTN98PT08 13995 mN

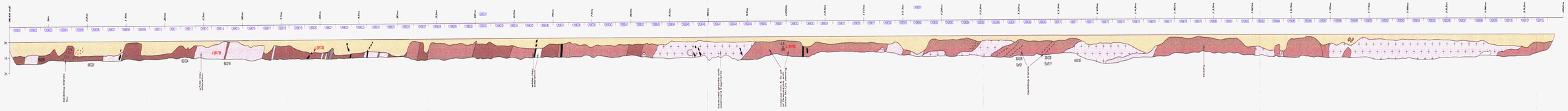

CTN98PT09 14695 mN

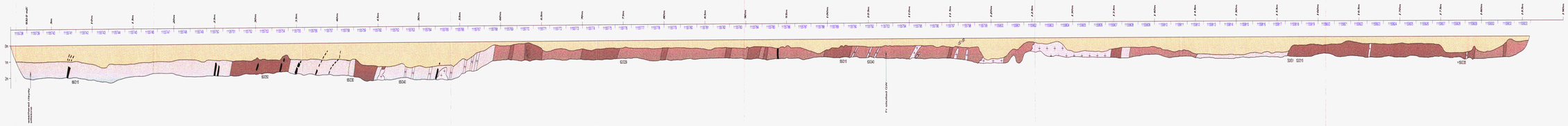

CTN98PT10 14895 mN

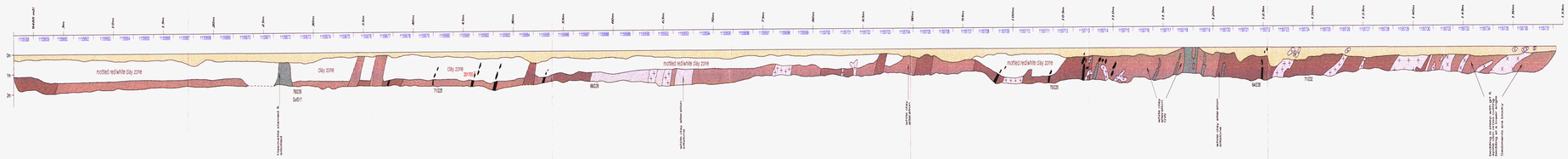

CTN98PT11 15195 mN

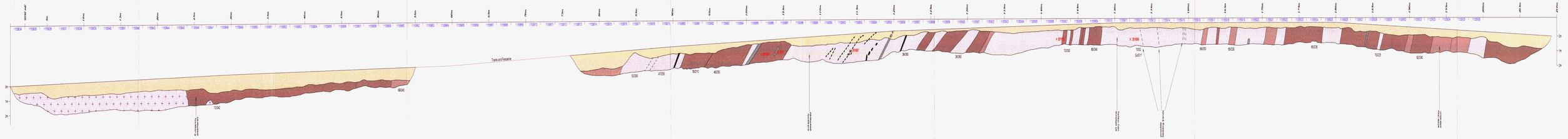

CTN98PT12 15395 mN

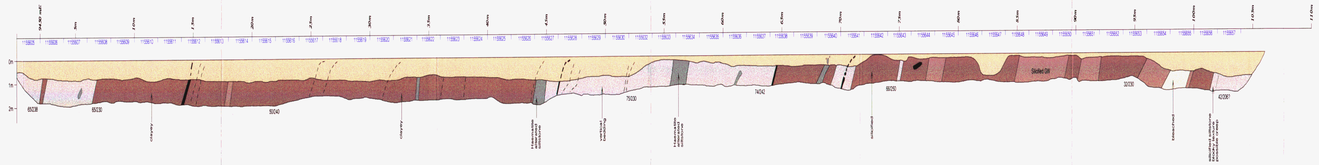

LEGEND

- Transported/ deep red clay cover
- Greywacke dominant
- Cordierite Schist — PETROLOGY INDICATES THAT THE "CORDIERITE" IS MUSCOVITE-BIOTITE AFTER ANDALUSITE
- Siltstone
- Granite
- Aplite
- Bleached Sediments
- Haematite altered sediments
- Quartz Veins
- 55025 - Dip / Dip direction of Foliation
- x 3N1T08 - Niche Sample ID
- 1+5N0201 - Composite Channel Sample ID

N

2 0 2 4 6 8 10 metres

Scale 1:100

CR98/657

Acacia RESOURCES

Northern Territory
BROCKS CREEK PROJECT

EL 8624 - Bonrook North
Costeans
CTN98PT08 to
CTN98PT12

Author: N.M.	Office: DWN	Scale: 1:100
Drawn: A.L.H.	Date: 7/10/98	Revised:
Plotted Date: 7/10/98		Report No:
Filed: U:\+drilling\costeans\brocksnorth\cos98pt08.12.DGN		Figure No: 9

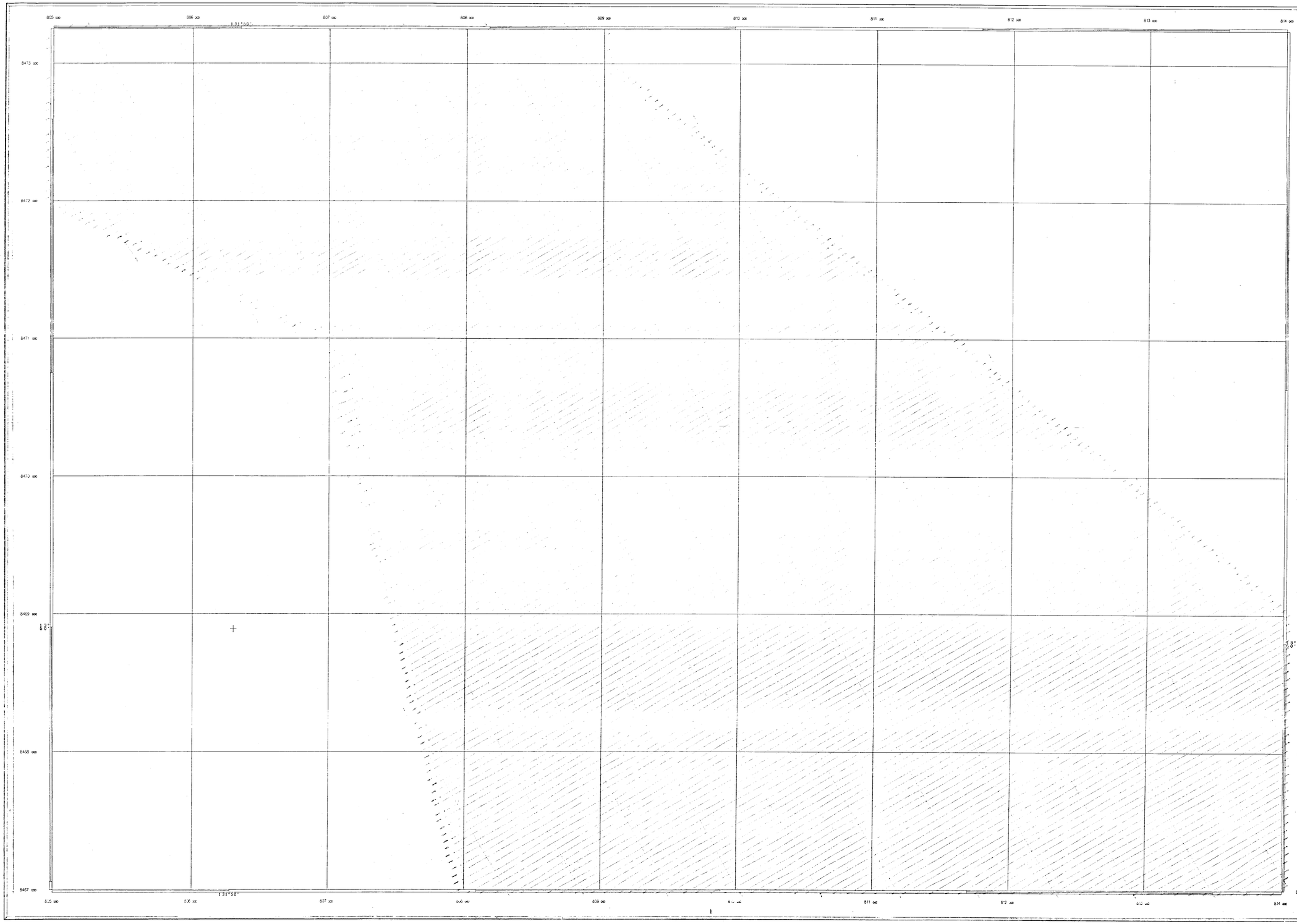

AIRBORNE SURVEY SPECIFICATIONS

Flight Line Direction:	060 - 240 degrees
Flight Line Separation:	50 metres
Tie Line Direction:	150 - 330 degrees
Tie Line Separation:	500 metres
Mean Terrain Clearance:	20 metres
Sample Interval:	4-5 metres
Navigation:	Differential GPS
Survey Flown:	July 1997

AIRBORNE SURVEY EQUIPMENT

Acquisition:	UTS Geophysics
Aircraft:	FU24-950 Aircraft
Magnetometer:	Scintrex Cesium Vapour CS-2
Resolution:	0.001 nT
Sensitivity:	0.001 nT
Recording Interval:	0.1 sec
Compensation:	RMS AADC II Compensator

Index to adjoining sheets
Pine Creek

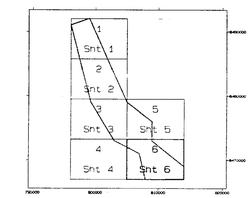

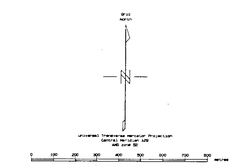

UTS Geophysics

FIGURE 10

ACACIA RESOURCES LIMITED

PINE CREEK (NT)
DETAILED AERO-MAG SURVEY
FLIGHT PATH MAP

DRAWN: UTS GEOPHYSICS	SCALE: 1:10000
DATE: 19th NOVEMBER 1997	UTS JOB A194 - AREA 10 - SHEET 6

Pine Ck
Detailed Aeromag
Flight Path map
Job A194 - A 10-Sht 6
1:10,000
UTS Geophysics
19-11-97

CR98/557

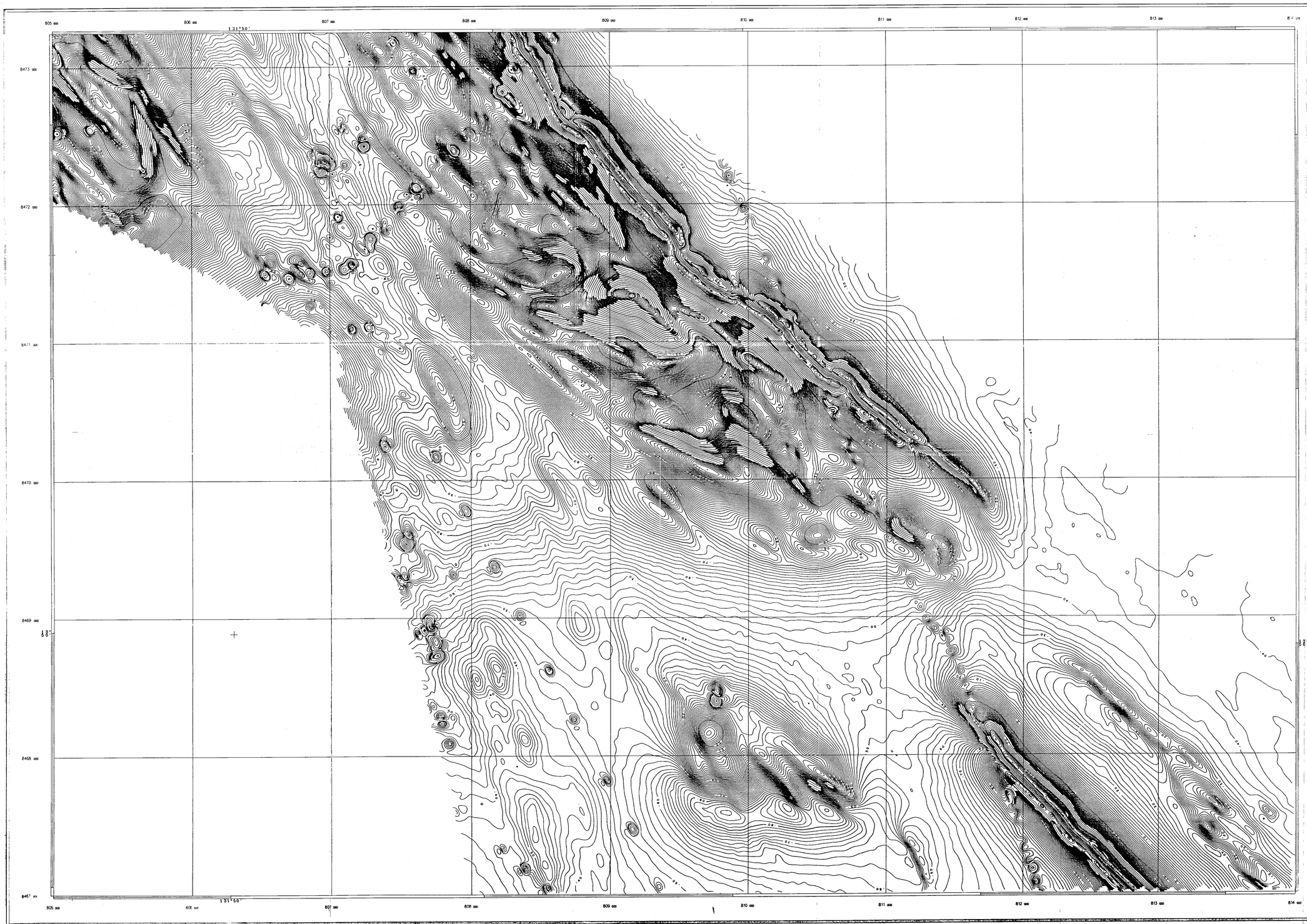

AIRBORNE SURVEY SPECIFICATIONS

Flight Line Direction:	060 - 240 degrees
Flight Line Separation:	50 metres
Tie Line Direction:	150 - 330 degrees
Tie Line Separation:	500 metres
Mean Terrain Clearance:	20 metres
Sample Interval:	4-5 metres
Navigation:	Differential GPS
Survey Flown:	June 1997

AIRBORNE SURVEY EQUIPMENT

Acquisition:	UTS Geophysics
Aircraft:	Fletcher FU24-950
Magnetometer:	Scintrex Cesium Vapour CS-2
Resolution:	0.001 nT
Sensitivity:	0.001 nT
Recording Interval:	0.1 sec
Compensation:	RMS AADC II Compensator

PROCESSING DETAILS

Diurnal variations have been removed from the data.
Tie line levelling processes have been applied.
Enhanced microlevelling processes have been applied.
The magnetic regional gradient has been removed by subtraction of the IGRF 1995 model computed at the date of the survey.

Grid cell size:	10mE x 10mN
1st contour interval:	2nT
2nd contour interval:	10nT
3rd contour interval:	50nT
4th contour interval:	100nT
5th contour interval:	500nT

Index to adjoining sheets
Pine Creek

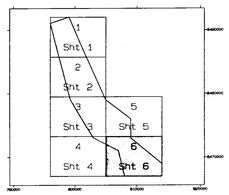

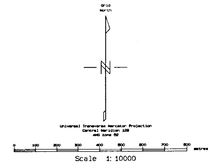

Scale 1: 10000

UTS Geophysics

FIGURE 11

ACACIA RESOURCES LIMITED

PINE CREEK PROJECT (NT)

DETAILED AERO-MAG SURVEY

CONTOUR MAP OF

TOTAL MAGNETIC INTENSITY

DRAWN: UTS GEOPHYSICS	SCALE: 1: 10000
DATE: 13th OCTOBER 1997	JOB: A194 - SHEET 6